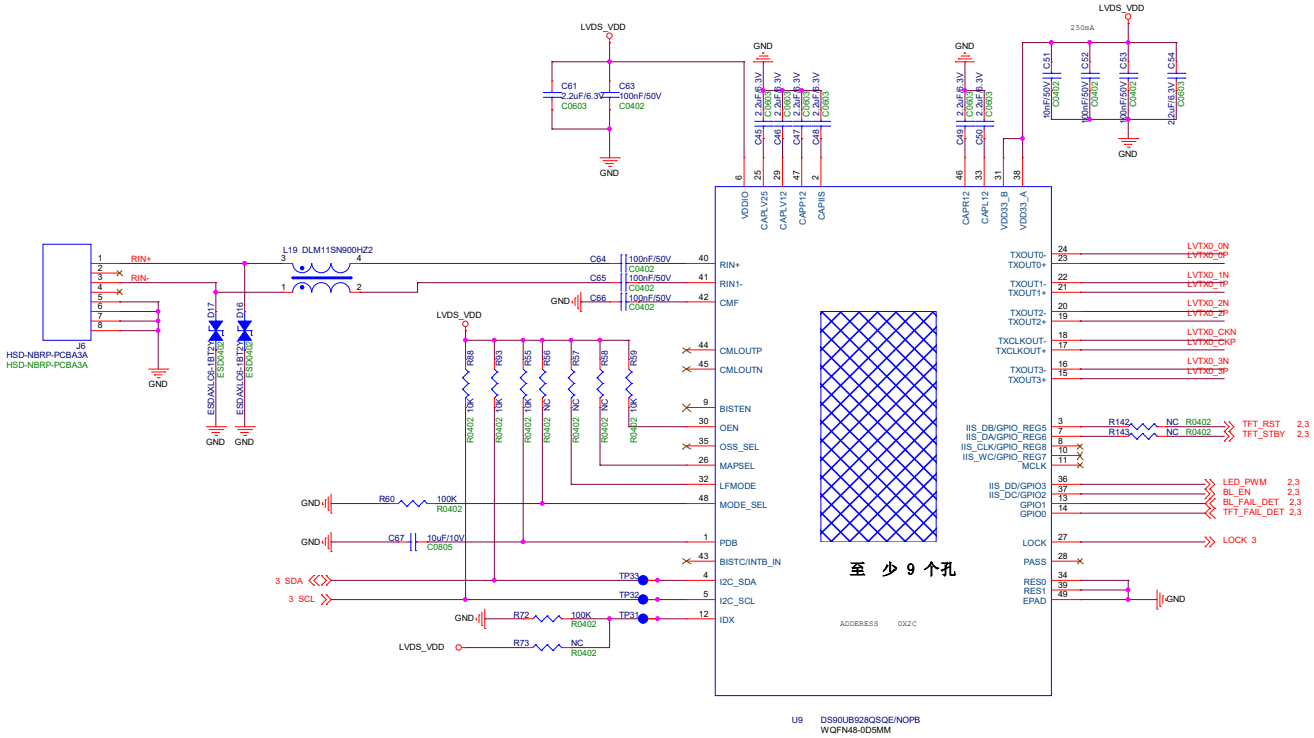

Title	T131_HUD		
Size A2	Document Number LVDS_LCD		Rev V1.0
Date: Monday, October 12, 2020	Sheet 4 of 5		