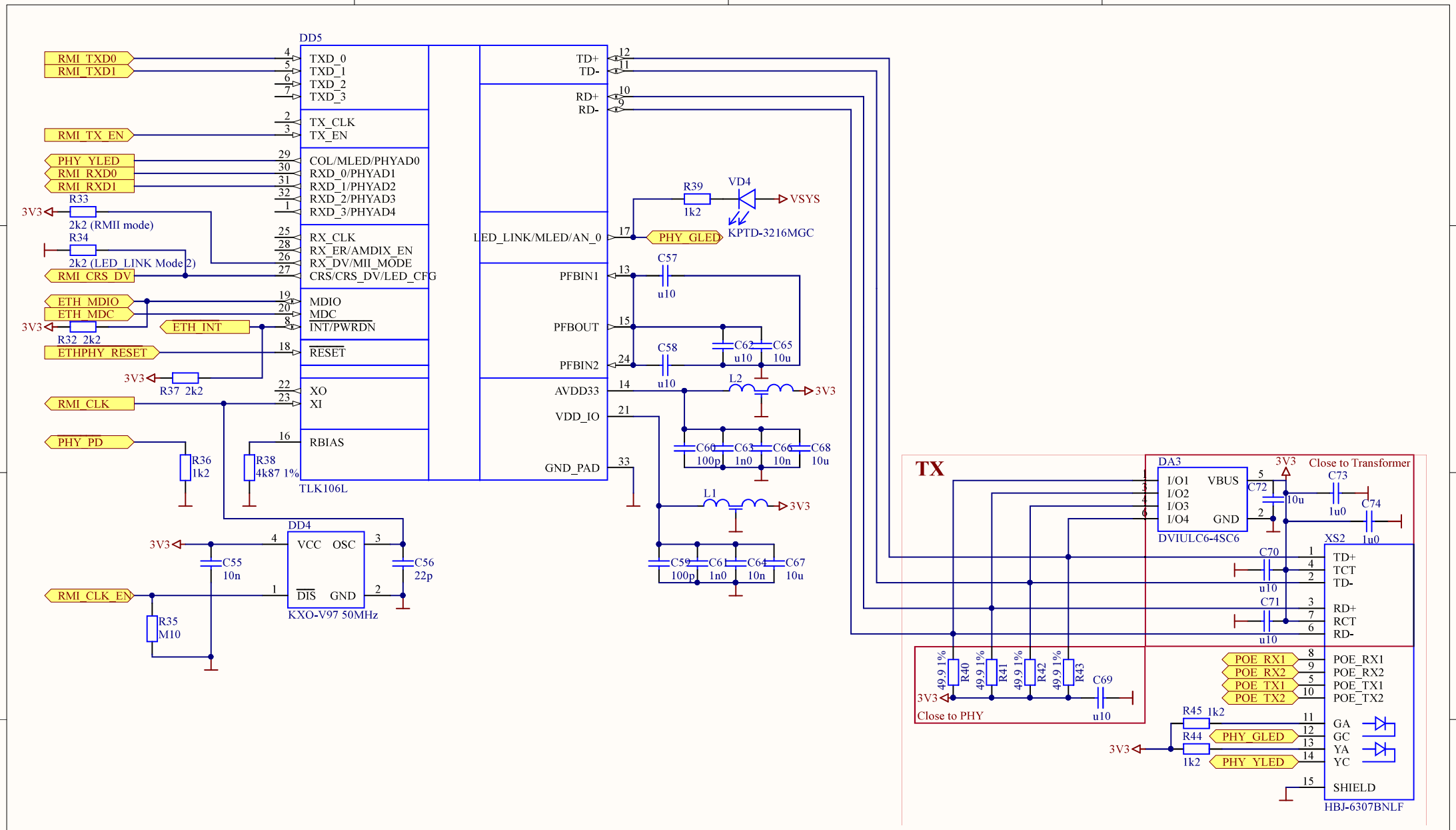

Title		
Ethernet PHY		
Size A4	Number	Revision 7269
Date: 16.09.2016		Sheet of
File: D:\Development\..\ethernet.SchDoc		Drawn By: