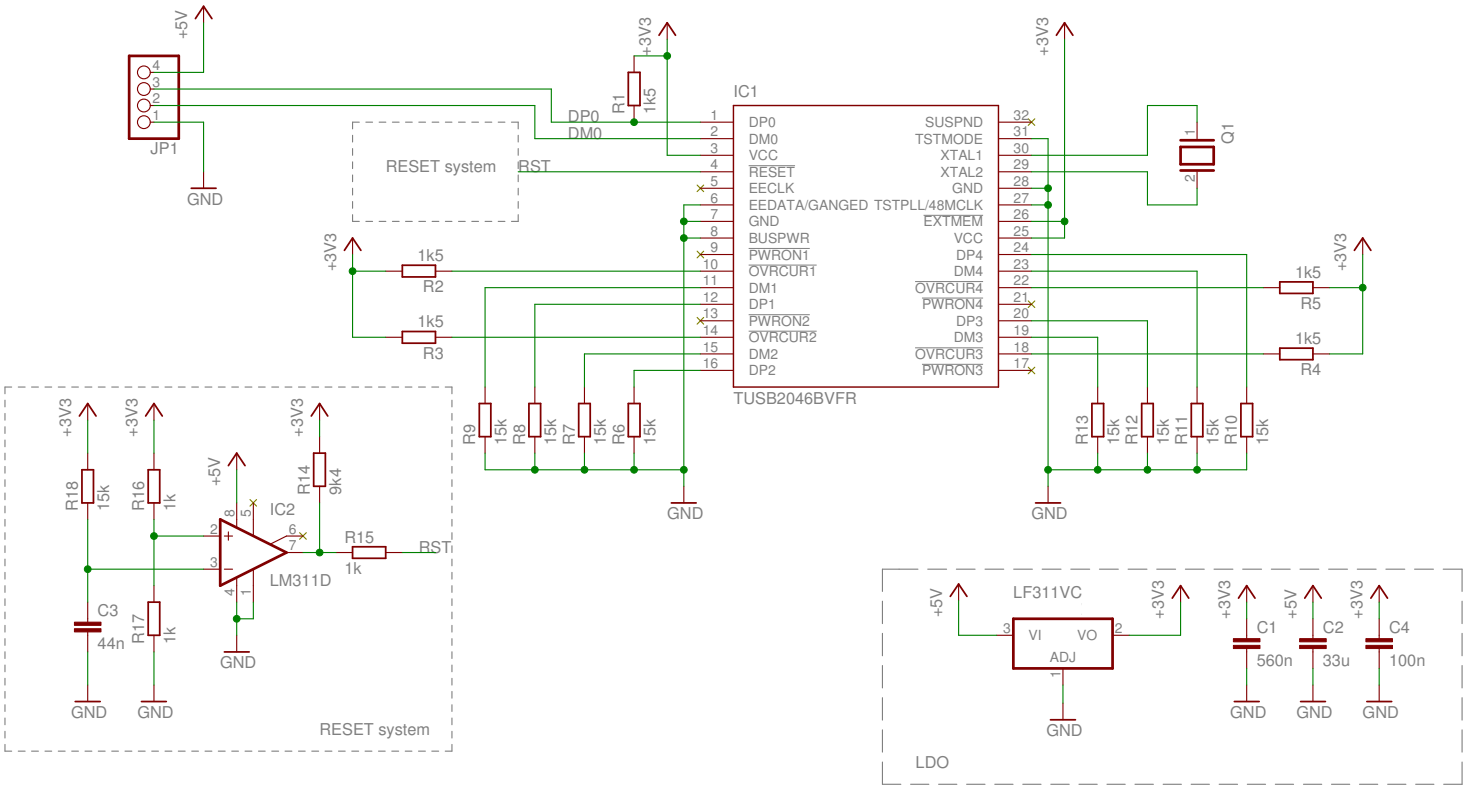
+5V
JP1
GND
DP0
DM0
R1
1k5
+3V3
IC1
RESET system
RST
DP0
DM0
VCC
RESET
EECLK
EEDATA/GANGED
GND
BUSPWR
PWRON1
OVRCUR1
DM1
DP1
PWRON2
OVRCUR2
DM2
DP2
SUSPND
TSTMODE
XTAL1
XTAL2
GND
TSTPLL/48MCLK
EXTMEM
VCC
DP4
DM4
OVRCUR4
PWRON4
DP3
DM3
OVRCUR3
PWRON3
TUSB2046BVFR
Q1
R2
1k5
R3
1k5
R5
1k5
R4
1k5
R9
15k
R8
15k
R7
15k
R6
15k
R13
15k
R12
15k
R11
15k
R10
15k
R18
15k
R16
1k
R14
9k4
IC2
LM311D
R15
1k
C3
44n
R17
1k
RESET system
LF311VC
VI
VO
ADJ
C1
560n
C2
33u
C4
100n
LDO