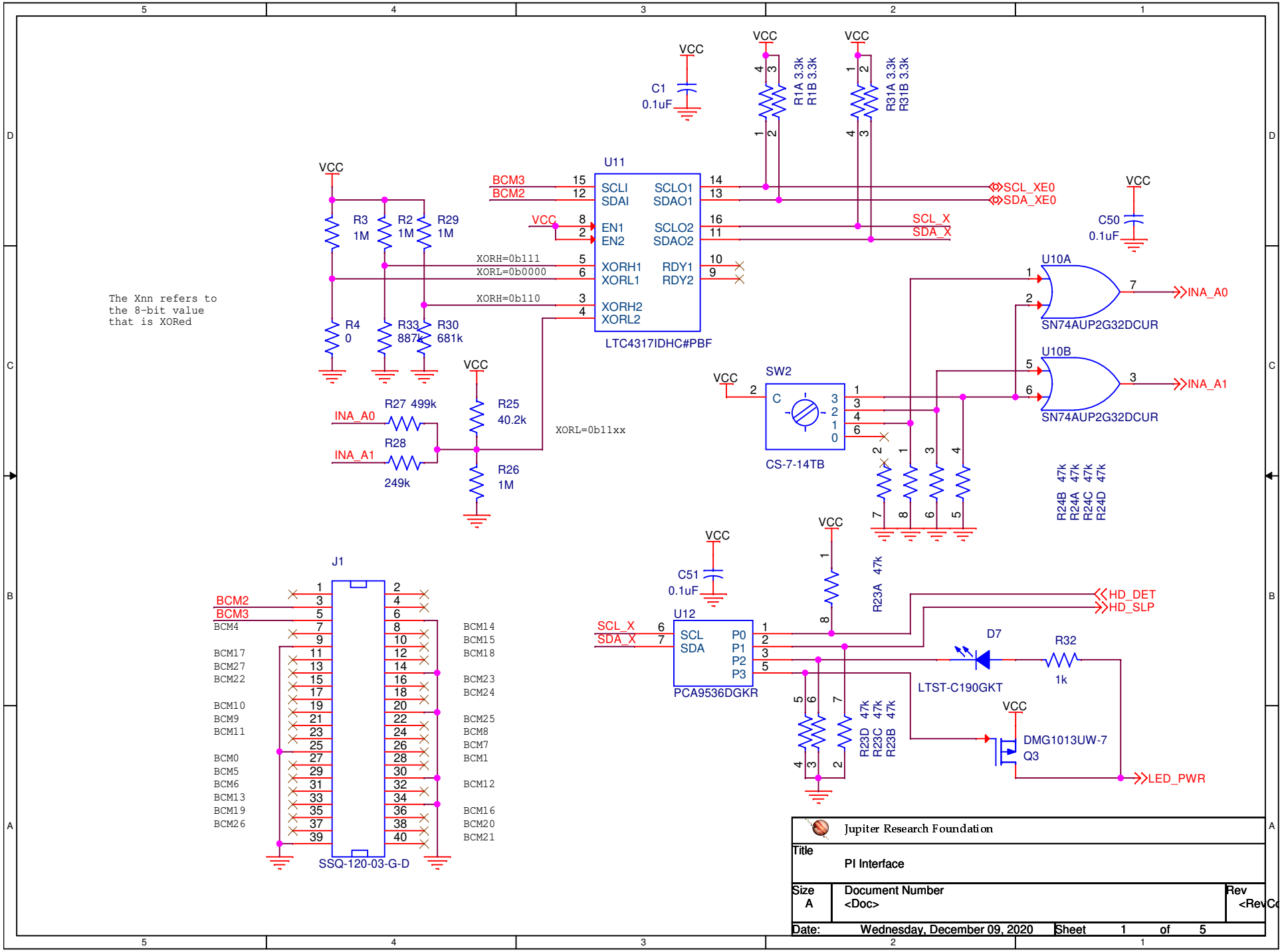
The Xnn refers to the 8-bit value that is XORed
U11
LTC4317IDHC#PBF
SCLI
SDAI
EN1
EN2
XORH1
XORL1
XORH2
XORL2
SCLO1
SDAO1
SCLO2
SDAO2
RDY1
RDY2
BCM3
BCM2
VCC
XORH=0b111
XORL=0b0000
XORH=0b110
XORL=0b11xx
SCL_XE0
SDA_XE0
SCL_X
SDA_X
C1
0.1uF
R1A 3.3k
R1B 3.3k
R31A 3.3k
R31B 3.3k
C50
0.1uF
R3
1M
R2
1M
R29
1M
R4
0
R33
887k
R30
681k
R27 499k
R28
249k
R25
40.2k
R26
1M
INA_A0
INA_A1
U10A
U10B
SN74AUP2G32DCUR
SW2
CS-7-14TB
R24B 47k
R24A 47k
R24C 47k
R24D 47k
C51
0.1uF
U12
PCA9536DGKR
P0
P1
P2
P3
R23A 47k
R23D 47k
R23C 47k
R23B 47k
HD_DET
HD_SLP
D7
LTST-C190GKT
R32
1k
DMG1013UW-7
Q3
LED_PWR
J1
SSQ-120-03-G-D
BCM4
BCM17
BCM27
BCM22
BCM10
BCM9
BCM11
BCM0
BCM5
BCM6
BCM13
BCM19
BCM26
BCM14
BCM15
BCM18
BCM23
BCM24
BCM25
BCM8
BCM7
BCM1
BCM12
BCM16
BCM20
BCM21
Jupiter Research Foundation
Title
PI Interface
Size
A
Document Number
<Doc>
Rev
<RevCo
Date: Wednesday, December 09, 2020
Sheet 1 of 5

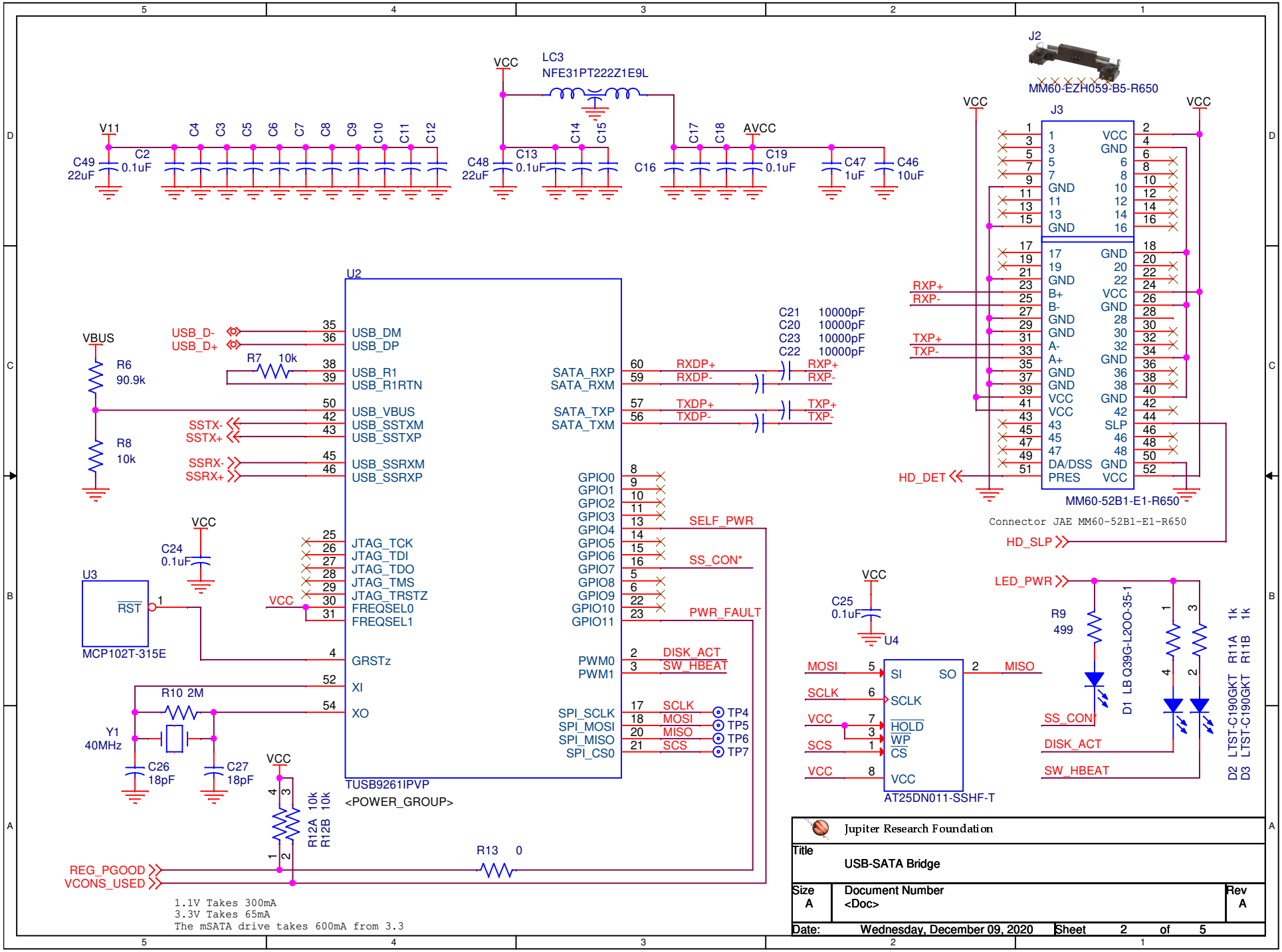
V11
C49 22uF
C2 0.1uF
C4 C3 C5 C6 C7 C8 C9 C10 C11 C12
VCC
LC3 NFE31PT222Z1E9L
C48 22uF
C13 0.1uF
C14 C15
C16
C17 C18
AVCC
C19 0.1uF
C47 1uF
C46 10uF
J2
MM60-EZH059-B5-R650
J3
MM60-52B1-E1-R650
Connector JAE MM60-52B1-E1-R650
RXP+
RXP-
TXP+
TXP-
HD_DET
HD_SLP
U2
TUSB9261IPVP
<POWER_GROUP>
USB_D-
USB_D+
USB_DM
USB_DP
USB_R1
USB_R1RTN
USB_VBUS
USB_SSTXM
USB_SSTXP
USB_SSRXM
USB_SSRXP
SSTX-
SSTX+
SSRX-
SSRX+
VBUS
R6 90.9k
R7 10k
R8 10k
SATA_RXP
SATA_RXM
SATA_TXP
SATA_TXM
RXDP+
RXDP-
TXDP+
TXDP-
C21 10000pF
C20 10000pF
C23 10000pF
C22 10000pF
GPIO0
GPIO1
GPIO2
GPIO3
GPIO4
GPIO5
GPIO6
GPIO7
GPIO8
GPIO9
GPIO10
GPIO11
SELF_PWR
SS_CON*
PWR_FAULT
PWM0
PWM1
DISK_ACT
SW_HBEAT
SPI_SCLK
SPI_MOSI
SPI_MISO
SPI_CS0
SCLK
MOSI
MISO
SCS
TP4
TP5
TP6
TP7
JTAG_TCK
JTAG_TDI
JTAG_TDO
JTAG_TMS
JTAG_TRSTZ
FREQSEL0
FREQSEL1
GRSTz
XI
XO
C24 0.1uF
U3
RST
MCP102T-315E
R10 2M
Y1 40MHz
C26 18pF
C27 18pF
R12A 10k
R12B 10k
R13 0
REG_PGOOD
VCONS_USED
1.1V Takes 300mA
3.3V Takes 65mA
The mSATA drive takes 600mA from 3.3
C25 0.1uF
U4
SI
SO
SCLK
HOLD
WP
CS
VCC
AT25DN011-SSHF-T
LED_PWR
R9 499
D1 LB Q39G-L2OO-35-1
SS_CON*
DISK_ACT
SW_HBEAT
D2 LTST-C190GKT R11A 1k
D3 LTST-C190GKT R11B 1k
Jupiter Research Foundation
Title
USB-SATA Bridge
Size A
Document Number
<Doc>
Rev A
Date: Wednesday, December 09, 2020
Sheet 2 of 5

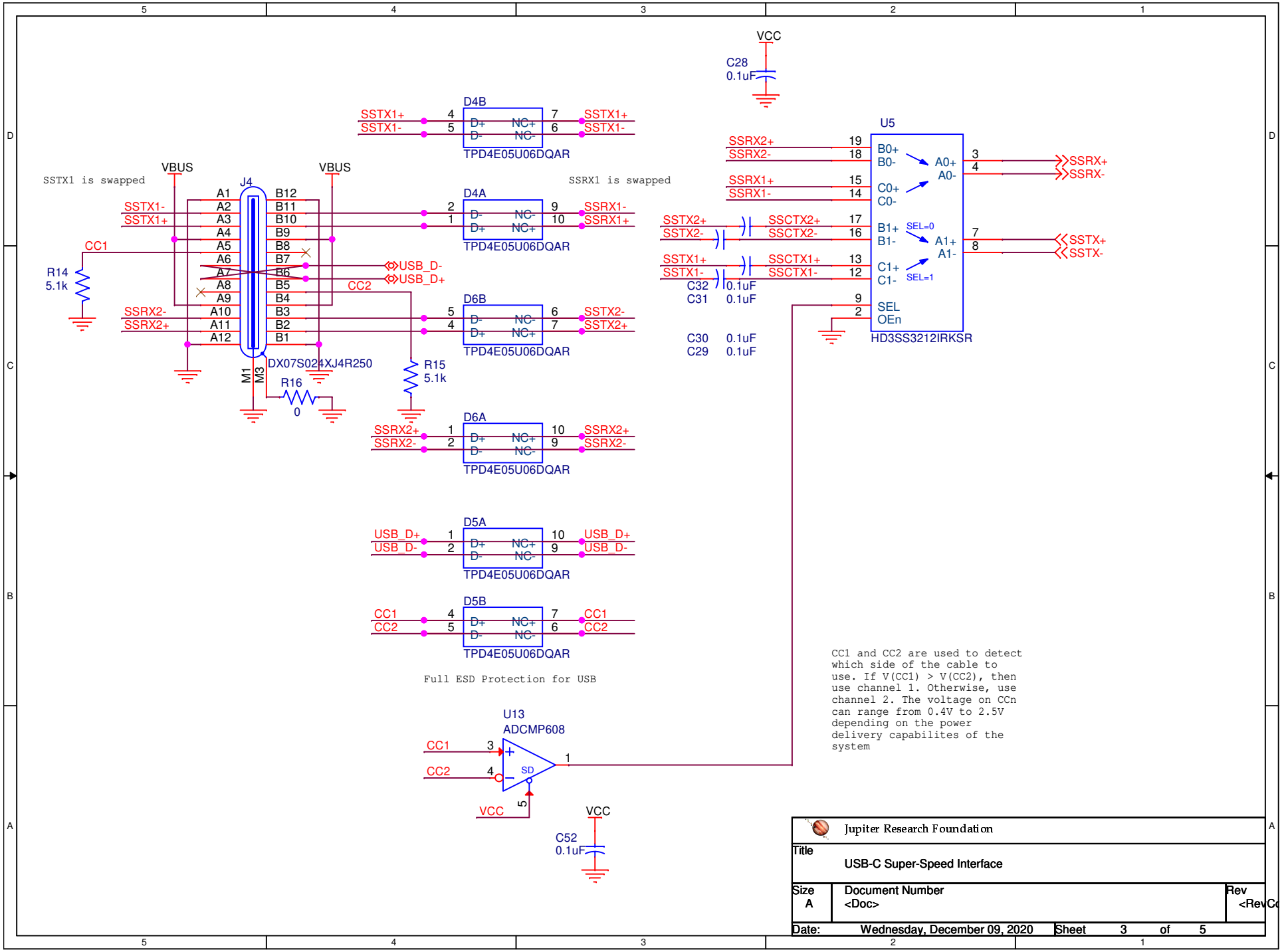
VCC
C28
0.1uF
D4B
SSTX1+
SSTX1-
TPD4E05U06DQAR
U5
SSRX2+
SSRX2-
SSRX1+
SSRX1-
B0+
B0-
A0+
A0-
C0+
C0-
B1+
B1-
A1+
A1-
C1+
C1-
SEL=0
SEL=1
SEL
OEn
HD3SS3212IRKSR
SSRX+
SSRX-
SSTX+
SSTX-
SSTX1 is swapped
SSRX1 is swapped
VBUS
J4
CC1
R14
5.1k
USB_D-
USB_D+
CC2
DX07S024XJ4R250
M1
M3
R16
0
R15
5.1k
D4A
D6B
D6A
D5A
D5B
SSCTX2+
SSCTX2-
SSCTX1+
SSCTX1-
C32
C31
0.1uF
C30
C29
Full ESD Protection for USB
U13
ADCMP608
SD
C52
0.1uF
CC1 and CC2 are used to detect which side of the cable to use. If V(CC1) > V(CC2), then use channel 1. Otherwise, use channel 2. The voltage on CCn can range from 0.4V to 2.5V depending on the power delivery capabilites of the system
Jupiter Research Foundation
Title
USB-C Super-Speed Interface
Size
A
Document Number
<Doc>
Rev
Date:
Wednesday, December 09, 2020
Sheet
3
of
5

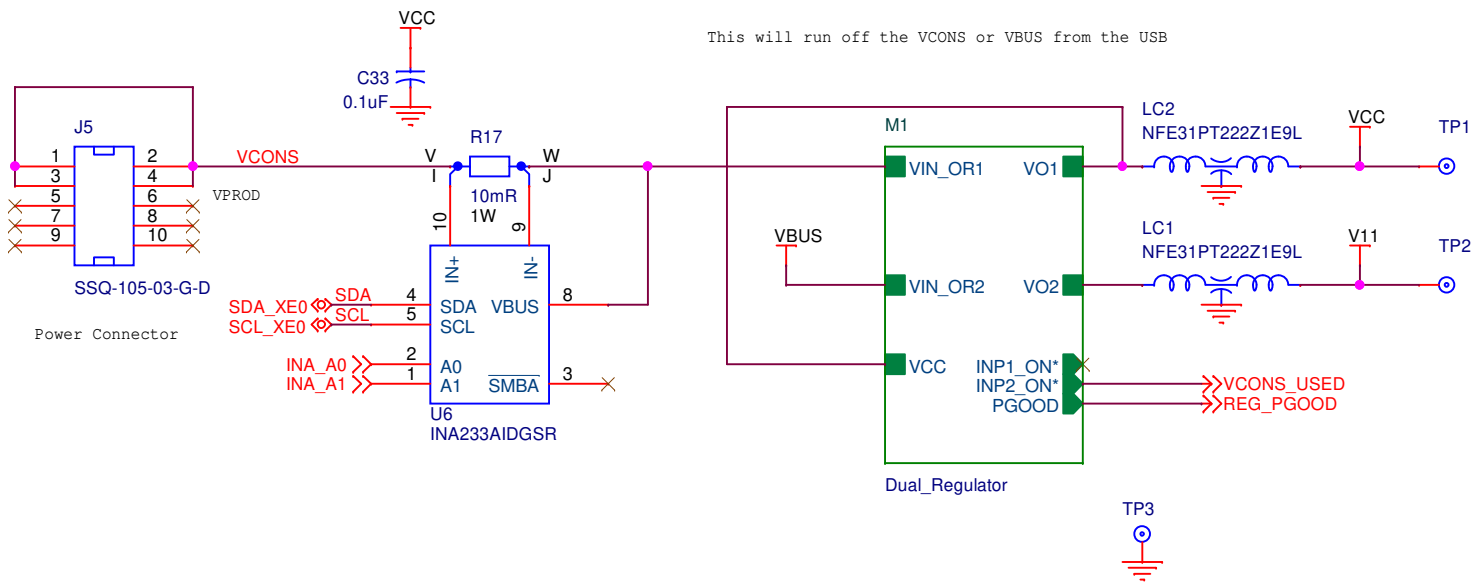

Jupiter Research Foundation		
Title: Power		
Size: A	Document Number: <Doc>	Rev: <RevCo
Date: Wednesday, December 09, 2020	Sheet 4 of 5	

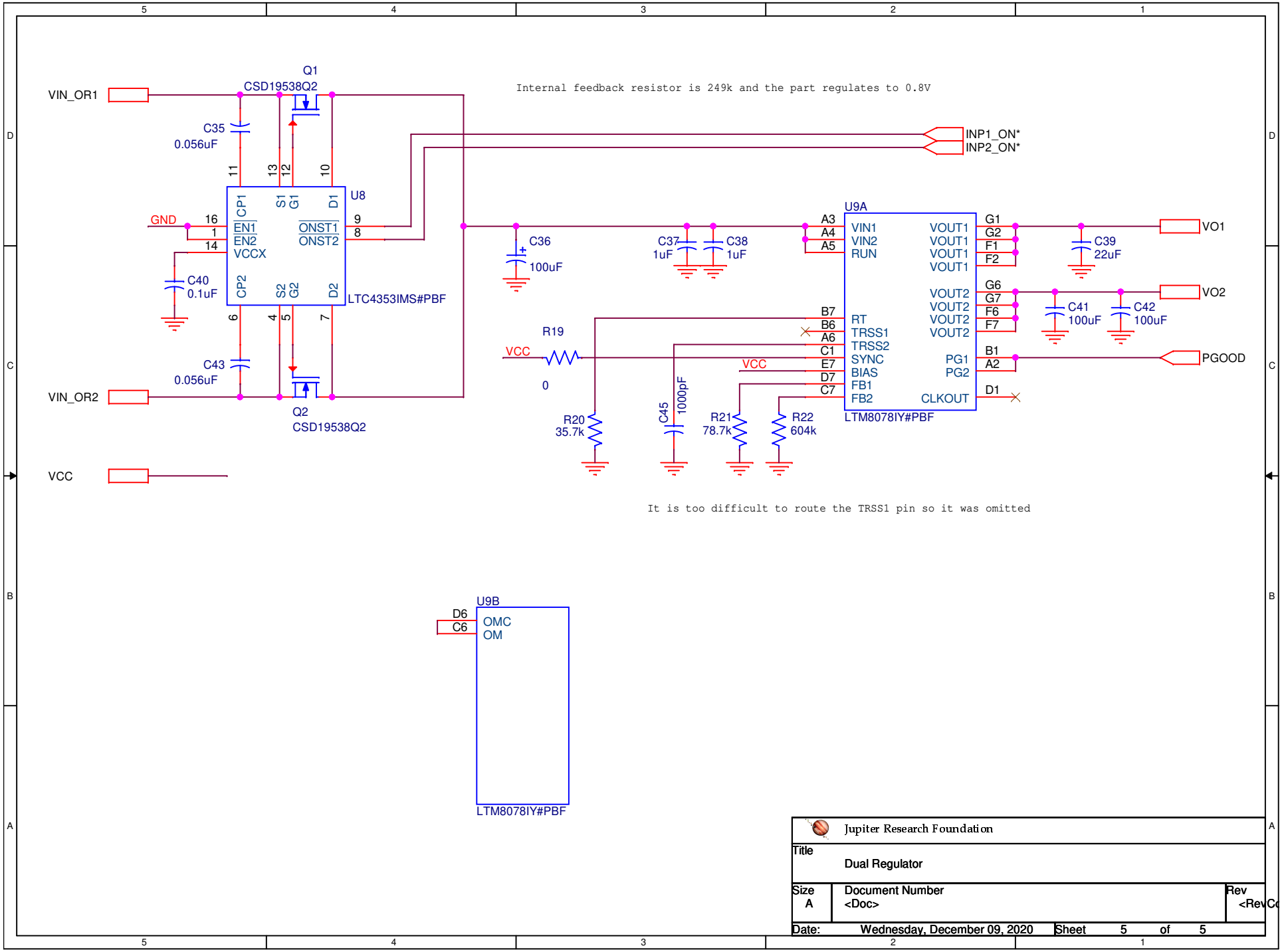

Jupiter Research Foundation		
Title: Dual Regulator		
Size: A	Document Number: <Doc>	Rev: <RevCo
Date: Wednesday, December 09, 2020	Sheet 5 of 5	