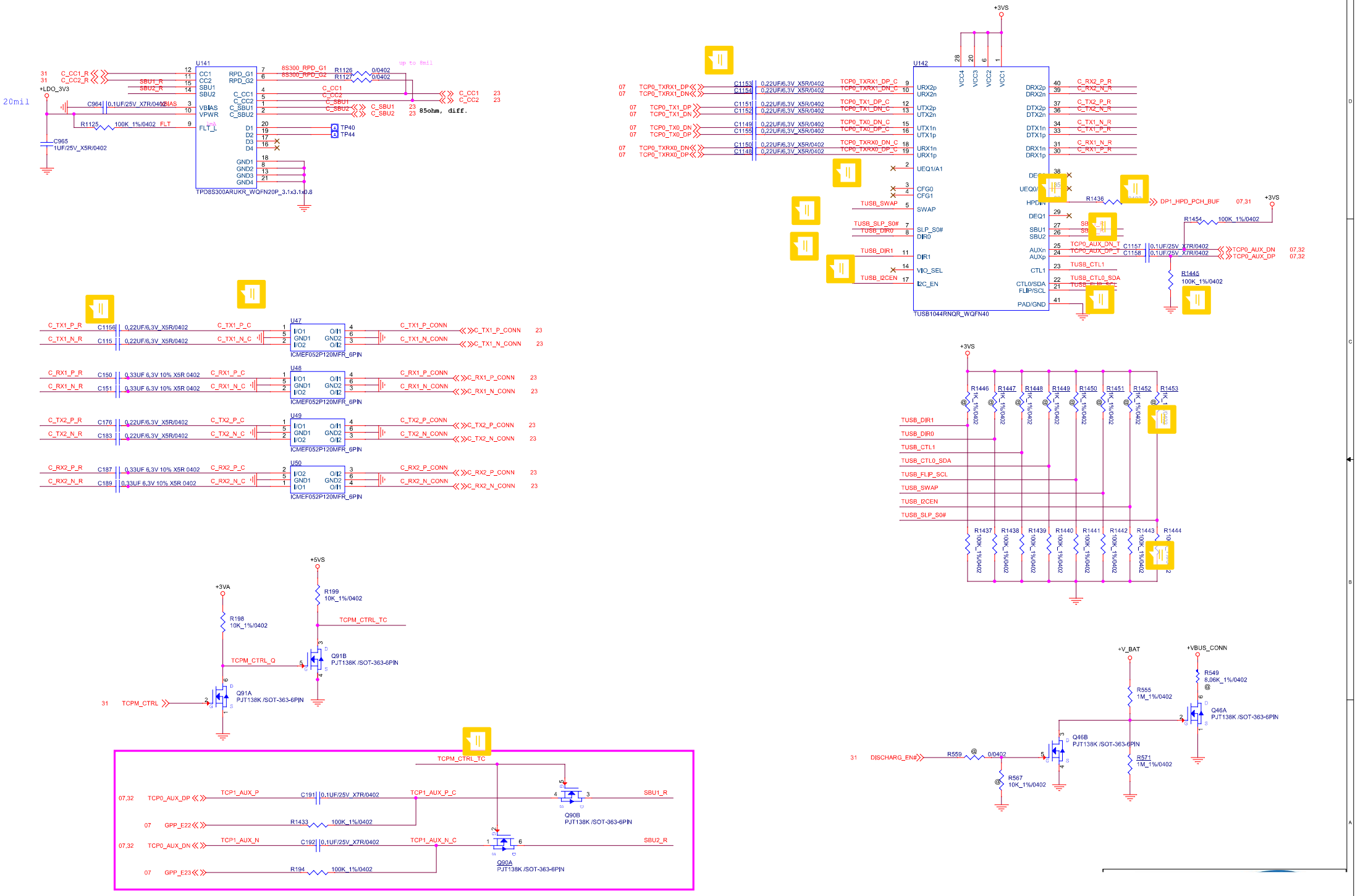
U141
TPD8S300ARUKR_WQFN20P_3.1x3.1x0.8
U142
TUSB1044RNQR_WQFN40
U47
U48
U49
U50
ICMEF052P120MFR_6PIN
Q91A PJT138K /SOT-363-6PIN
Q91B PJT138K /SOT-363-6PIN
Q90A PJT138K /SOT-363-6PIN
Q90B PJT138K /SOT-363-6PIN
Q46A PJT138K /SOT-363-6PIN
Q46B PJT138K /SOT-363-6PIN
+3VS
+5VS
+3VA
+V_BAT
+VBUS_CONN
+LDO_3V3
20mil
up to 8mil
85ohm, diff.
TCPM_CTRL_TC
TCPM_CTRL_Q
TCPM_CTRL
DISCHARG_EN#
DP1_HPD_PCH_BUF
TCP0_AUX_DN
TCP0_AUX_DP
TCP1_AUX_P
TCP1_AUX_N
GPP_E22
GPP_E23
SBU1_R
SBU2_R
TUSB_DIR1
TUSB_DIR0
TUSB_CTL1
TUSB_CTL0_SDA
TUSB_FLIP_SCL
TUSB_SWAP
TUSB_I2CEN
TUSB_SLP_S0#