DSI-2 PCB guideline--
Single-ended Z0 = 50 ohm
Total conductor length on board < 100 mm.
The intralane length mismatch must be less than 0.3 mm
The interlane length mismatch must be less than 1.5 mm

13.3" LCM

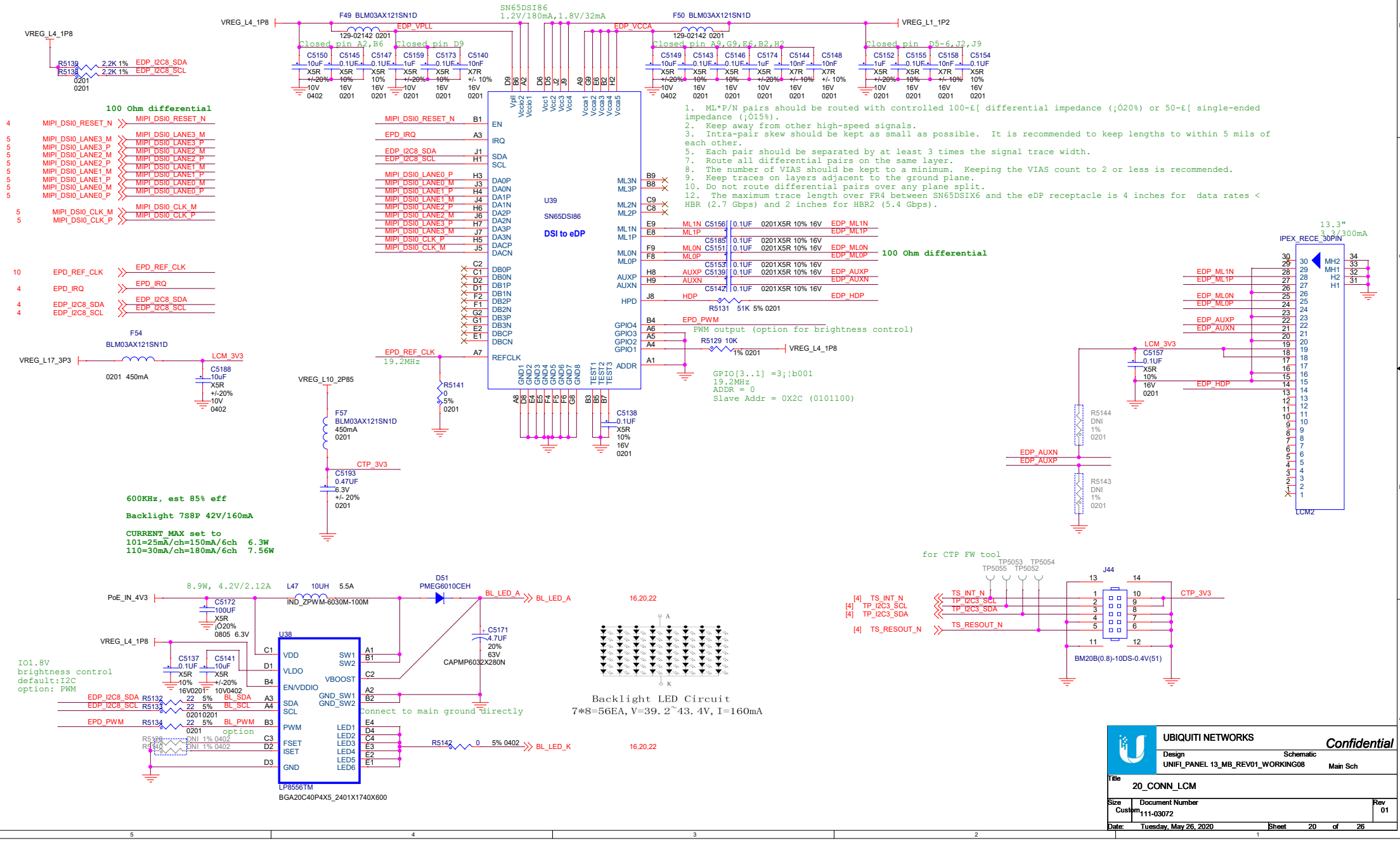

UBIQUITI NETWORKS
Confidential
Design: UNIFI_PANEL 13_MB_REV01_WORKING08
Schematic: Main Sch
Title: 20_CONN_LCM
Size: Custom
Document Number: 111-03072
Rev: 01
Date: Tuesday, May 26, 2020
Sheet 20 of 26