VOLTAGE MONITORING CIRCUIT

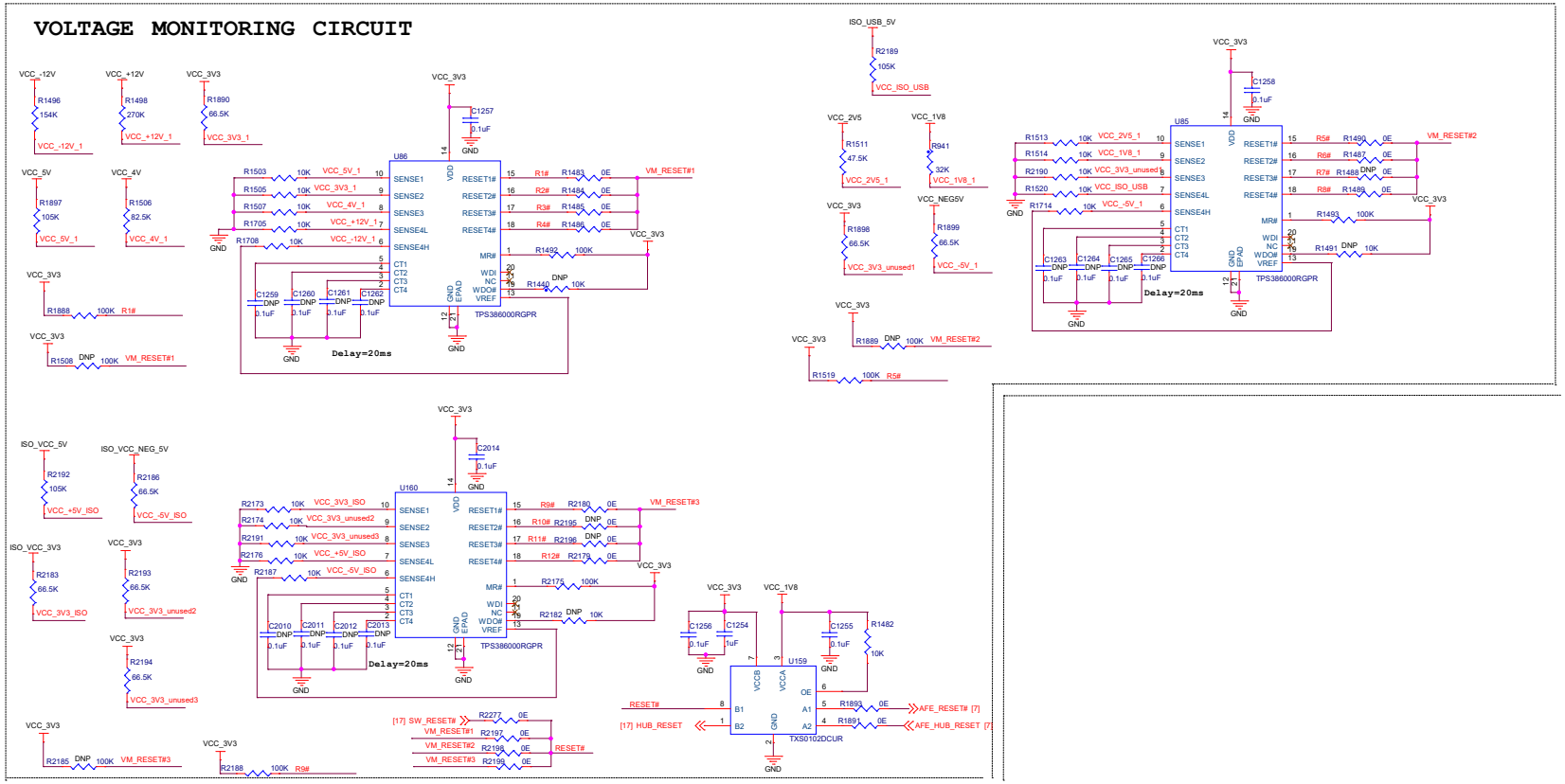

Title	<Title>
Size A2	Document Number <Doc>
Rev	<Rev>
Date: Saturday, April 11, 2026	Sheet 1 of 1