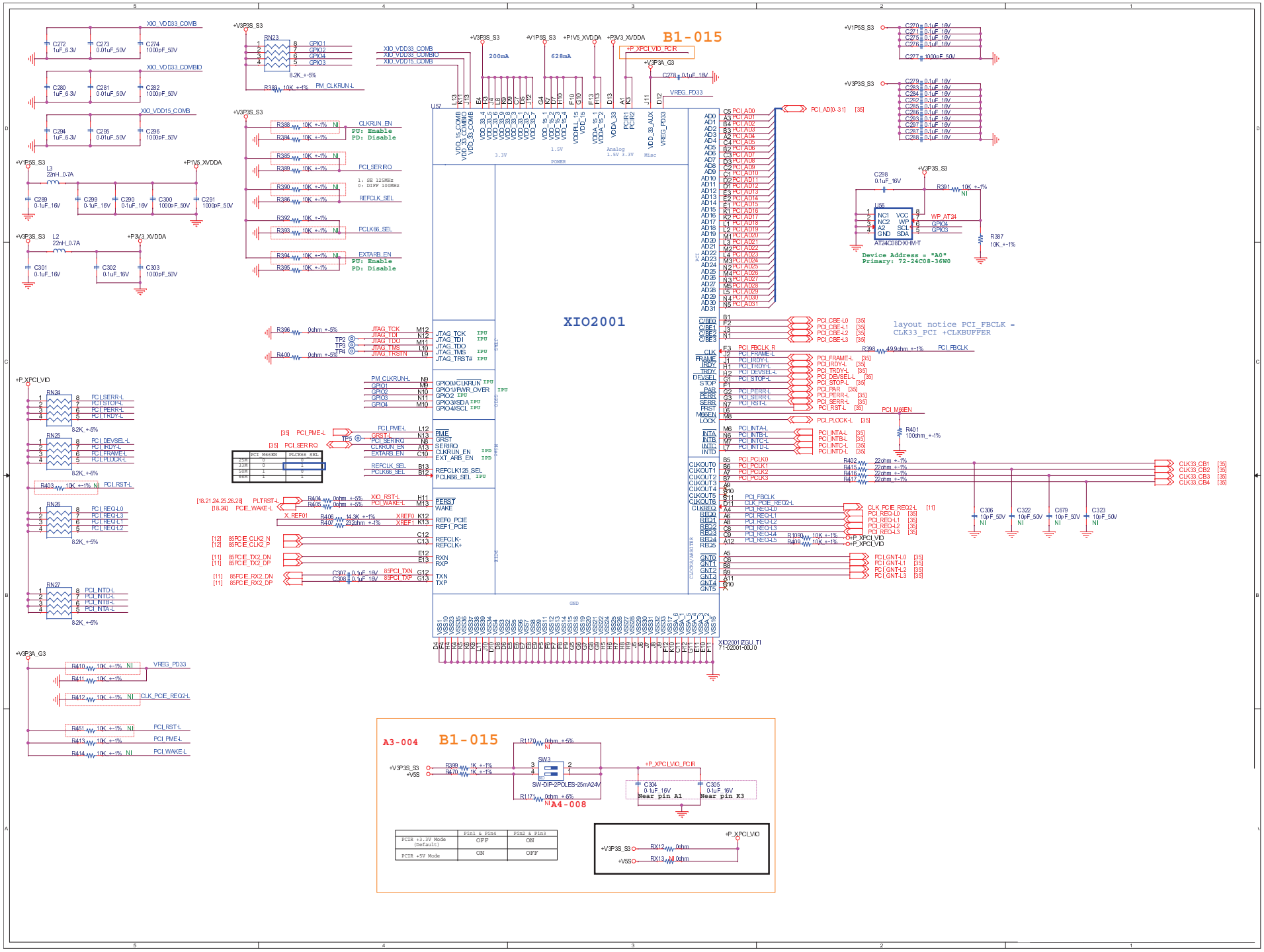
B1-015
XIO2001
layout notice PCI_FBCLK = CLK33_PCI +CLKBUFFER
Device Address = "A0"
Primary: 72-24C08-36W0
A3-004
B1-015
A4-008

H=2.54mm Connector PN: 61-65805-2500 (Default)

H=4.45mm Connector PN: 61-61805-2500

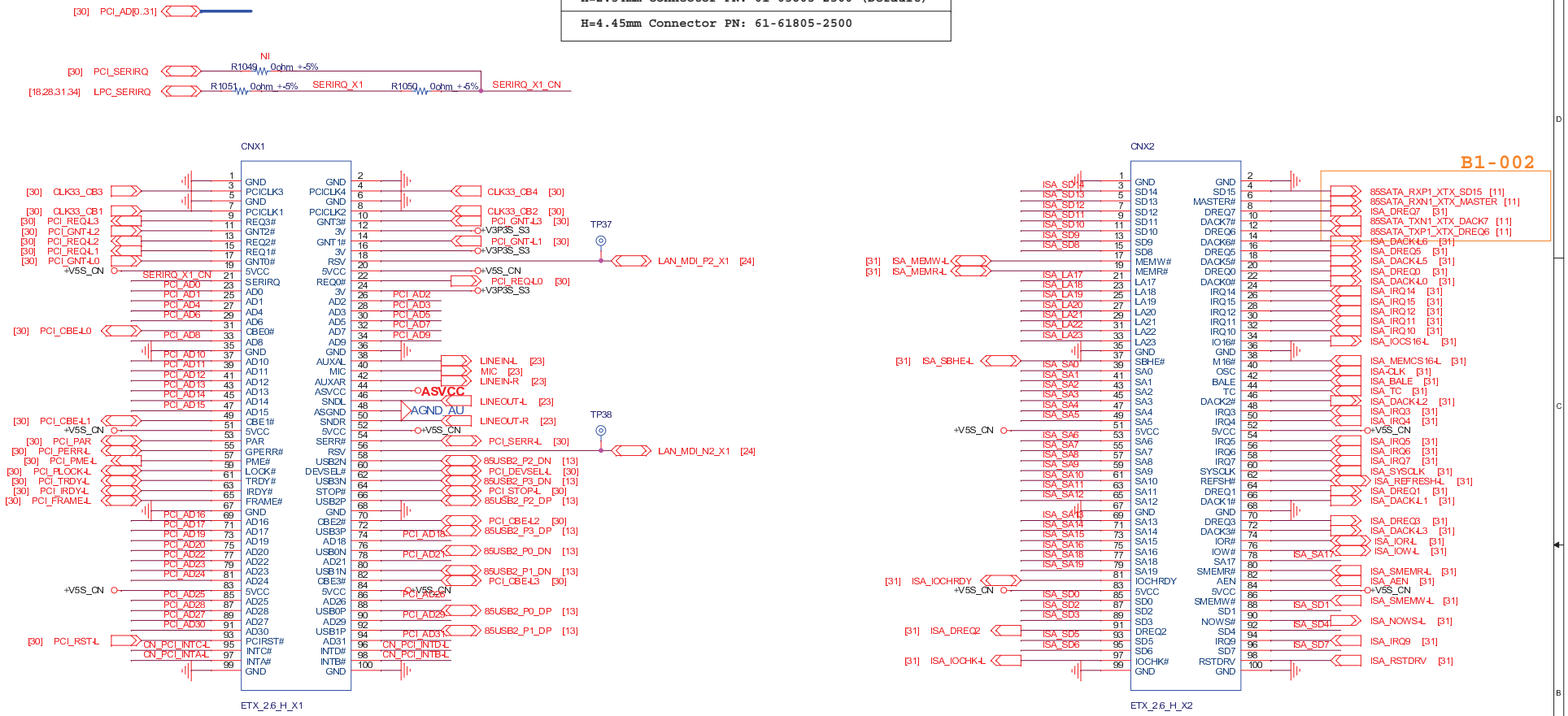

A2-010

Defult: EA#=0, EB#=0, S0=1(OFF), S1=0(ON)
=> YA, YB, YC, YD = INTB, INTC, INTD, INTA

FUNCTION TABLE(1)

Enable		Select		Outputs		Function
$\overline{EA}$	$\overline{EB}$	S_1	S_0	Y_A	Y_B	
H	X	X	X	Hi-Z	X	Disconnected
X	H	X	X	X	Hi-Z	Disconnected
L	L	L	L	I_{0A}	I_{0B}	$S_{1-0} = 0$
L	L	L	H	I_{1A}	I_{1B}	$S_{1-0} = 1$
L	L	H	L	I_{2A}	I_{2B}	$S_{1-0} = 2$
L	L	H	H	I_{3A}	I_{3B}	$S_{1-0} = 3$

NOTE:
1. H = HIGH Voltage Level
   L = LOW Voltage Level
   X = Don't Care
   Z = High-Impedence

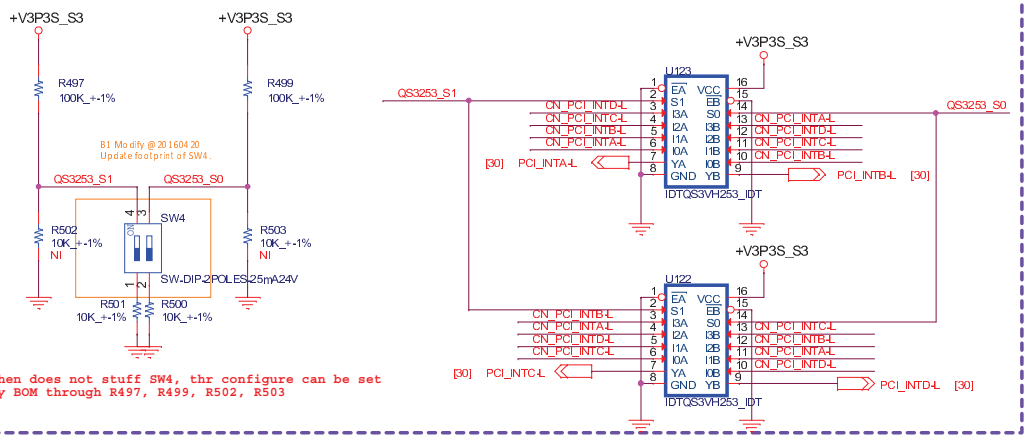

When does not stuff SW4, thr configure can be set by BOM through R497, R499, R502, R503