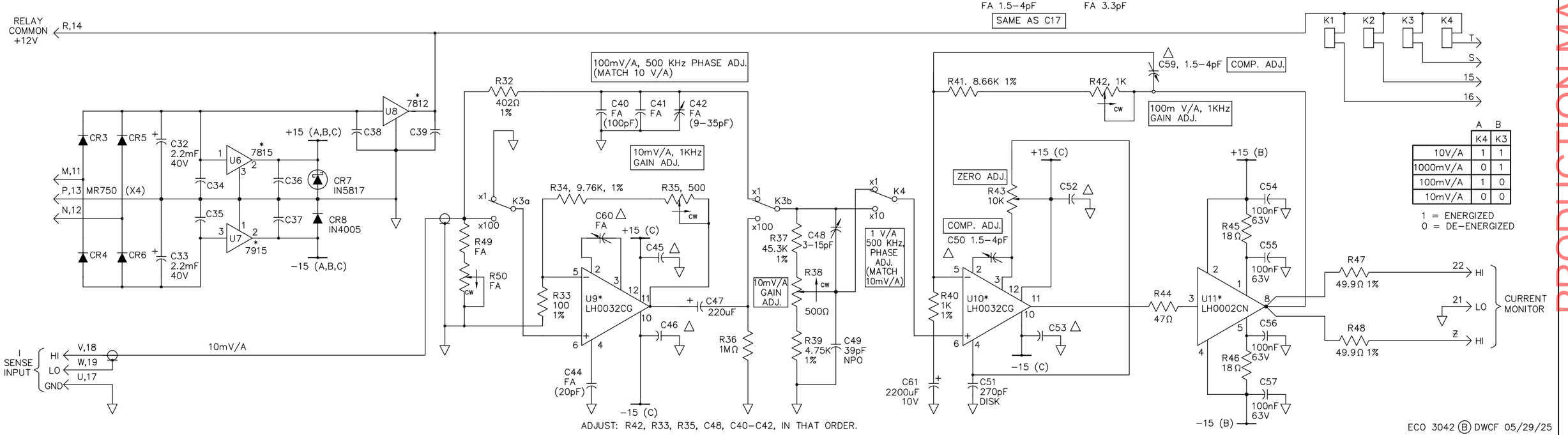

	A K4	B K3
10V/A	1	1
1000mV/A	0	1
100mV/A	1	0
10mV/A	0	0

1 = ENERGIZED
0 = DE–ENERGIZED