600-800VDC

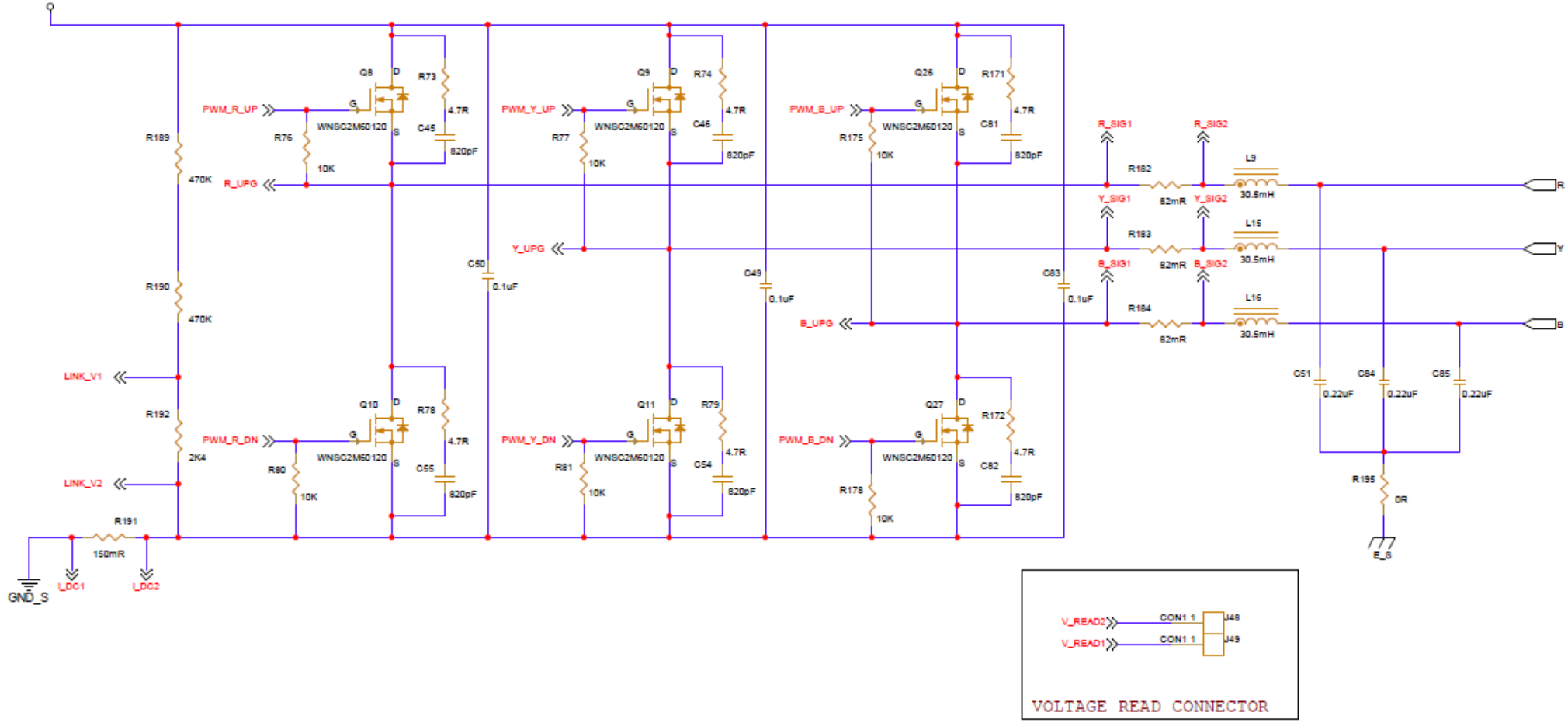
PWM_R_UP
PWM_Y_UP
PWM_B_UP
PWM_R_DN
PWM_Y_DN
PWM_B_DN
R_UPG
Y_UPG
B_UPG
LINK_V1
LINK_V2
GND_S
I_DC1
I_DC2
R189
470K
R190
470K
R192
2K4
R191
150mR
R76
R77
R175
R80
R81
R178
10K
Q8
Q9
Q26
Q10
Q11
Q27
WNSC2M60120
R73
R74
R171
R78
R79
R172
4.7R
C45
C46
C81
C55
C54
C82
820pF
C50
C49
C83
0.1uF
R_SIG1
R_SIG2
Y_SIG1
Y_SIG2
B_SIG1
B_SIG2
R182
R183
R184
82mR
L9
L15
L16
30.5mH
C51
C84
C85
0.22uF
R195
0R
E_S
R
Y
B
V_READ2
V_READ1
CON1 1
J48
J49
VOLTAGE READ CONNECTOR

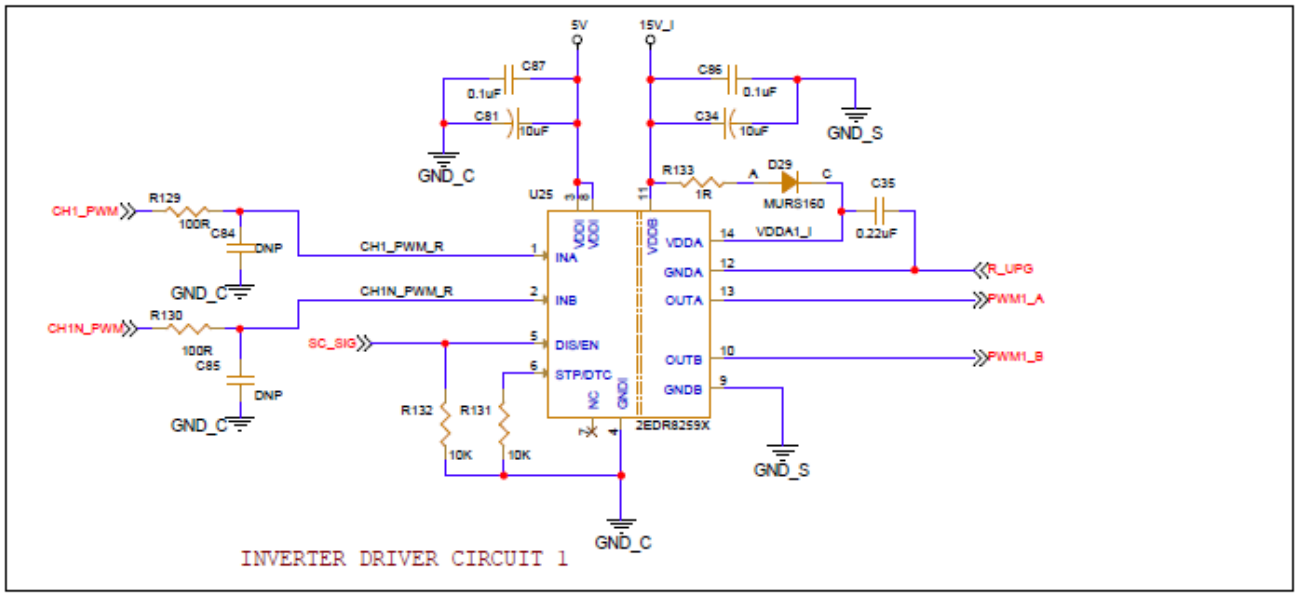

INVERTER DRIVER CIRCUIT 1

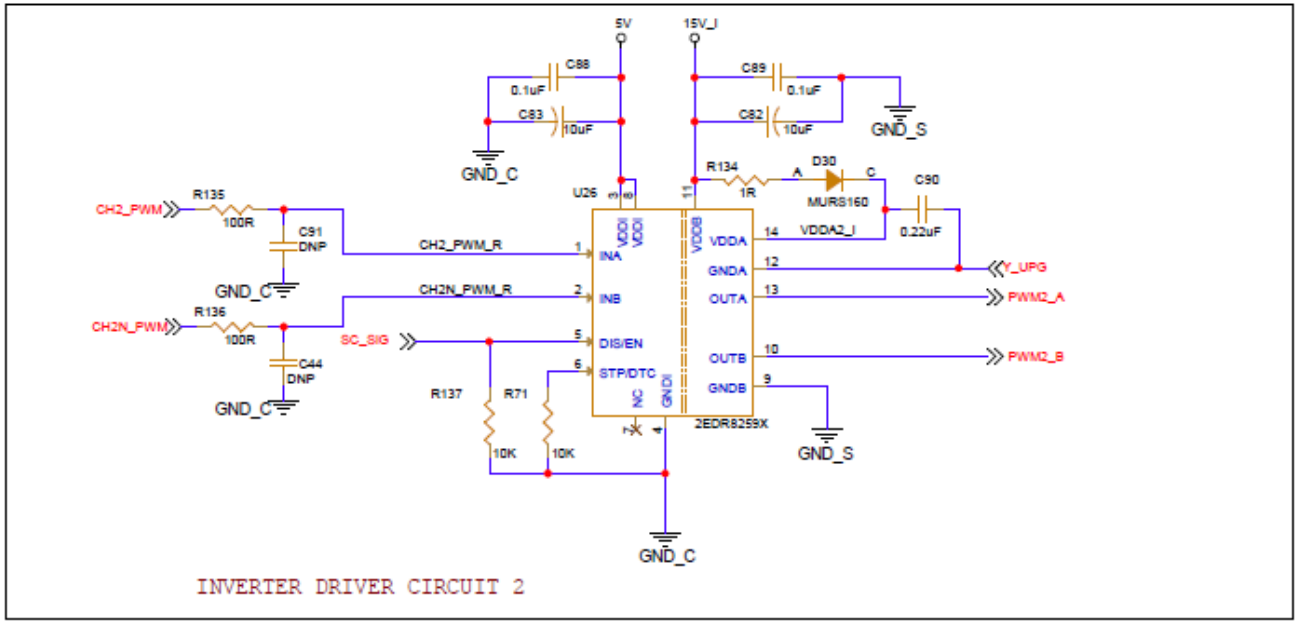

INVERTER DRIVER CIRCUIT 2

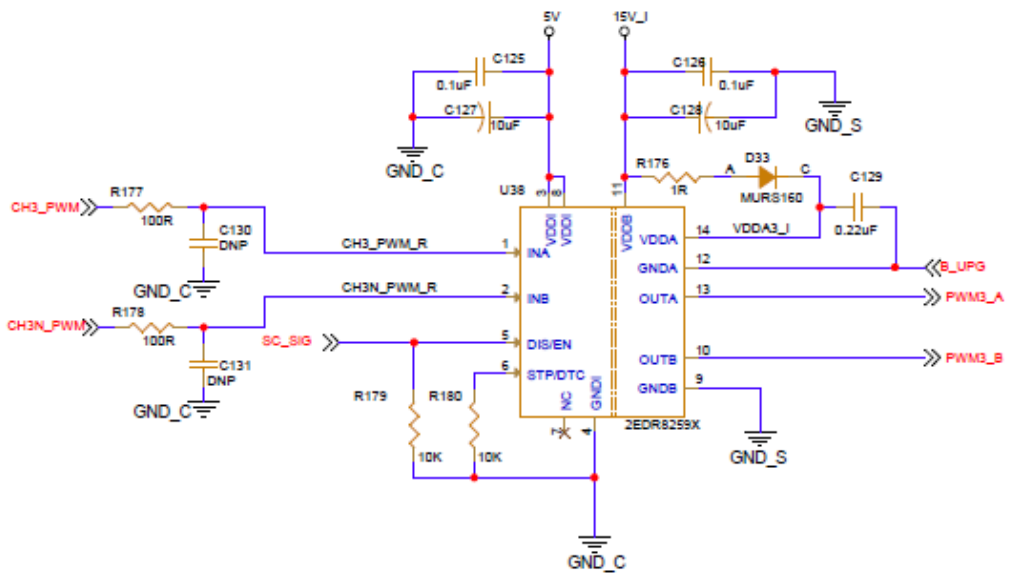
5V
15V_I
C125
0.1uF
C127
10uF
C126
0.1uF
C128
10uF
GND_S
GND_C
R176
1R
D33
MURS160
C129
0.22uF
U38
CH3_PWM
R177
100R
C130
DNP
CH3_PWM_R
CH3N_PWM_R
CH3N_PWM
R178
100R
C131
DNP
SC_SIG
R179
R180
10K
10K
VDDI
VDDI
VDDB
INA
INB
DIS/EN
STP/DTC
NC
GNDI
VDDA
GNDA
OUTA
OUTB
GNDB
VDDA3_I
B_UPG
PWM3_A
PWM3_B
2EDR8259X
INVERTER DRIVER CIRCUIT 3

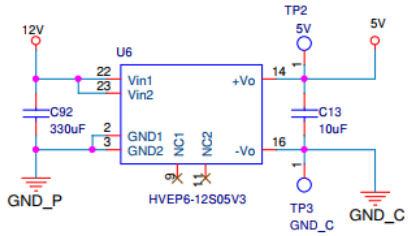
12V
U6
TP2
5V
5V
Vin1
Vin2
+Vo
C92
330uF
GND1
GND2
NC1
NC2
-Vo
C13
10uF
GND_P
HVEP6-12S05V3
TP3
GND_C
GND_C
ISOLATED DCDC 12-5V 1000mA

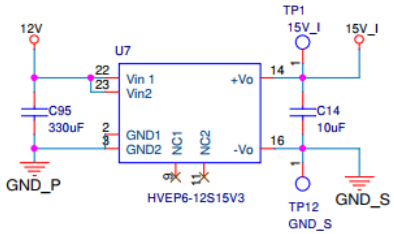
12V
U7
TP1
15V_I
15V_I
Vin 1
Vin2
+Vo
C95
330uF
GND1
GND2
NC1
NC2
-Vo
C14
10uF
GND_P
HVEP6-12S15V3
TP12
GND_S
GND_S
ISOLATED DCDC 12-15V 400mA

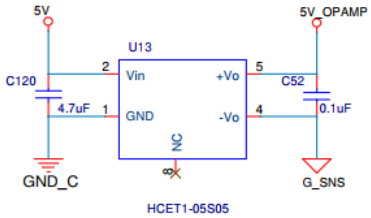
5V
5V_OPAMP
U13
C120
4.7uF
Vin
+Vo
C52
0.1uF
GND
-Vo
NC
GND_C
G_SNS
HCET1-05S05