CURRENT GAIN CONTROL CIRCUIT

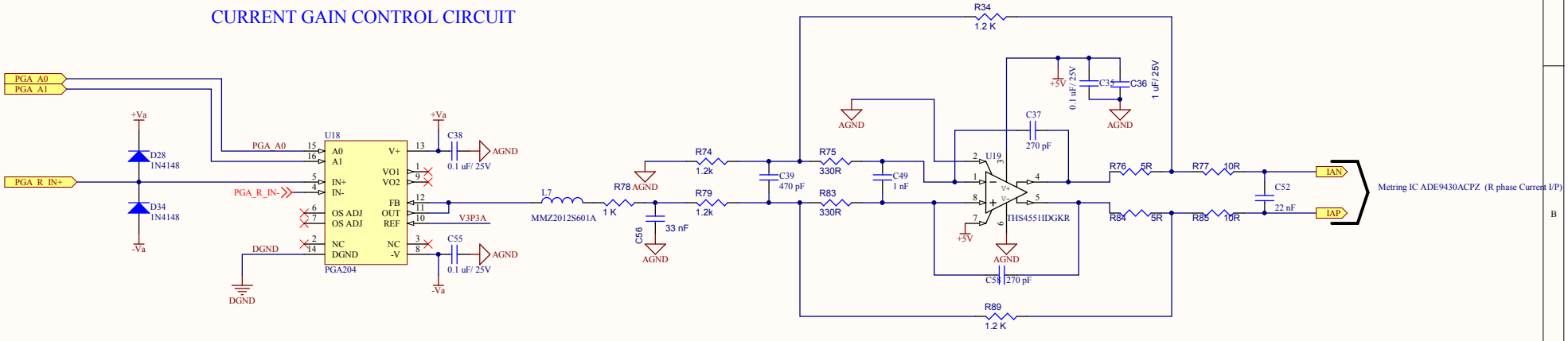

Title		
Size A3	Number	Revision
Date: 09/03/2026		Sheet of
File: \\...\Sheet1.SchDoc		Drawn By: