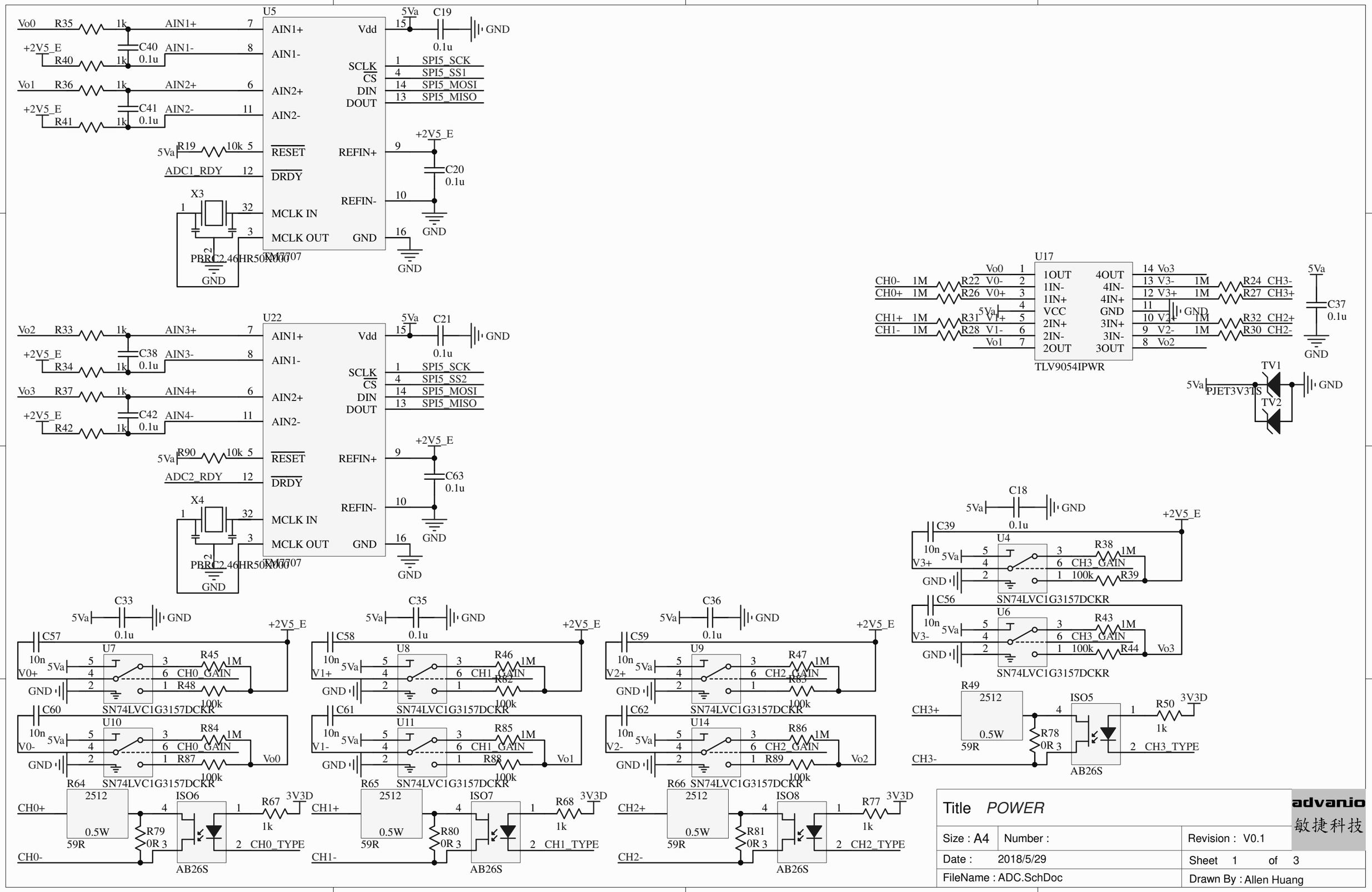

Title	*POWER*		advanio 敏捷科技
Size : A4	Number :	Revision : V0.1	
Date : 2018/5/29		Sheet 1 of 3	
FileName : ADC.SchDoc		Drawn By : Allen Huang	