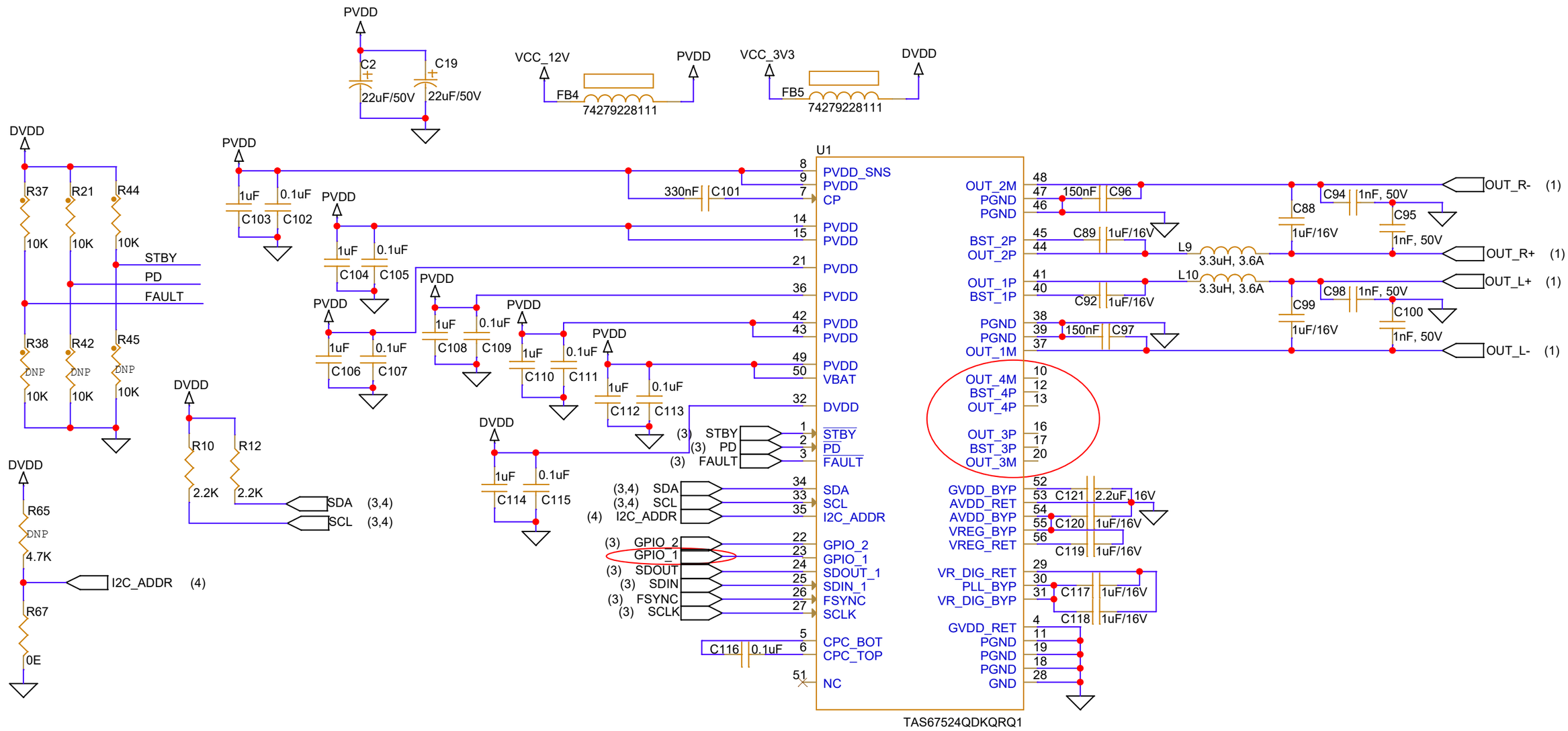AMPLIFIER CIRCUIT