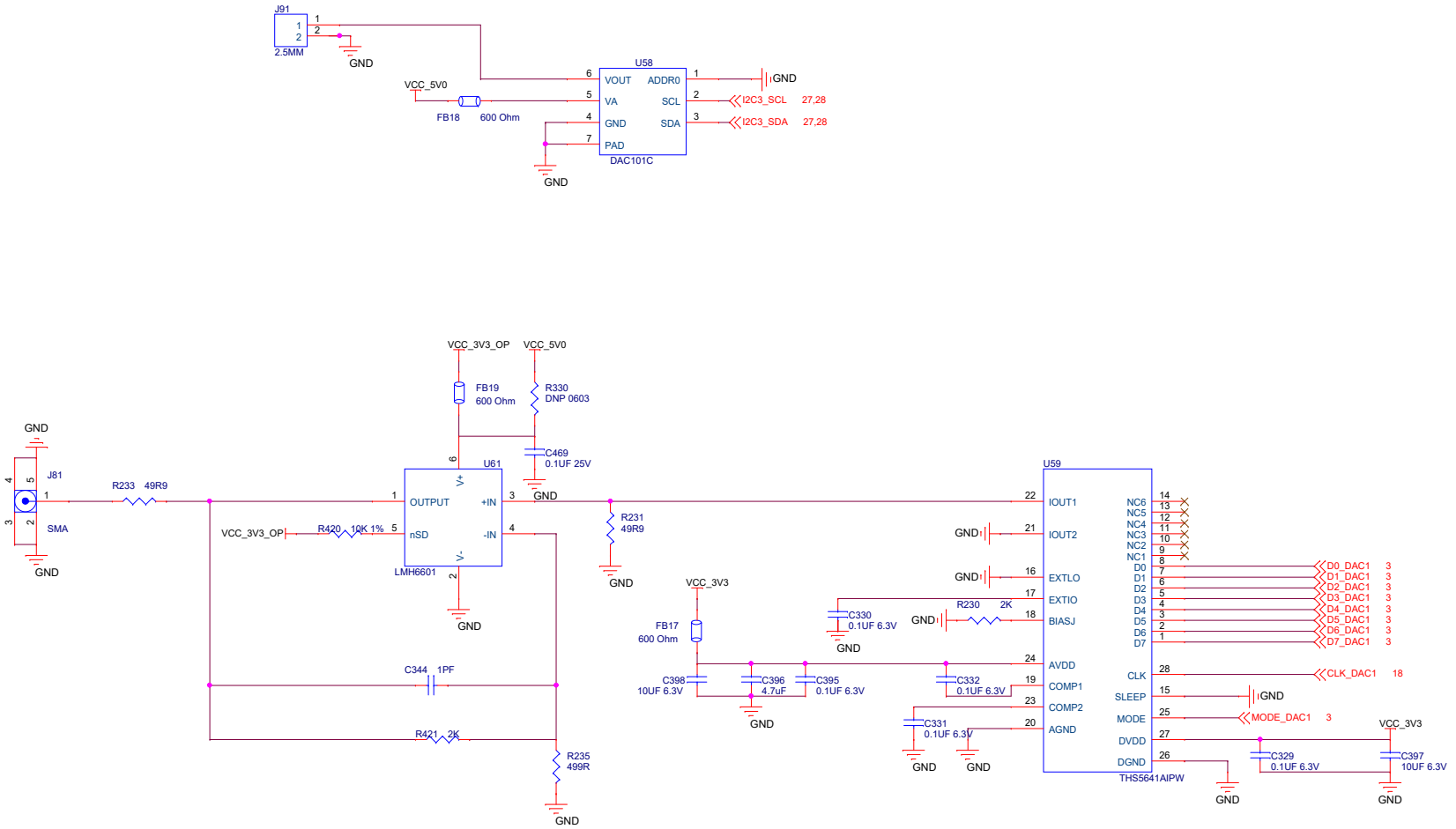

Title	Fiber Sensing		
Size Custom	Document Number SCH001-2022		Rev A
Date: Tuesday, November 08, 2022	Sheet 17 of 29		