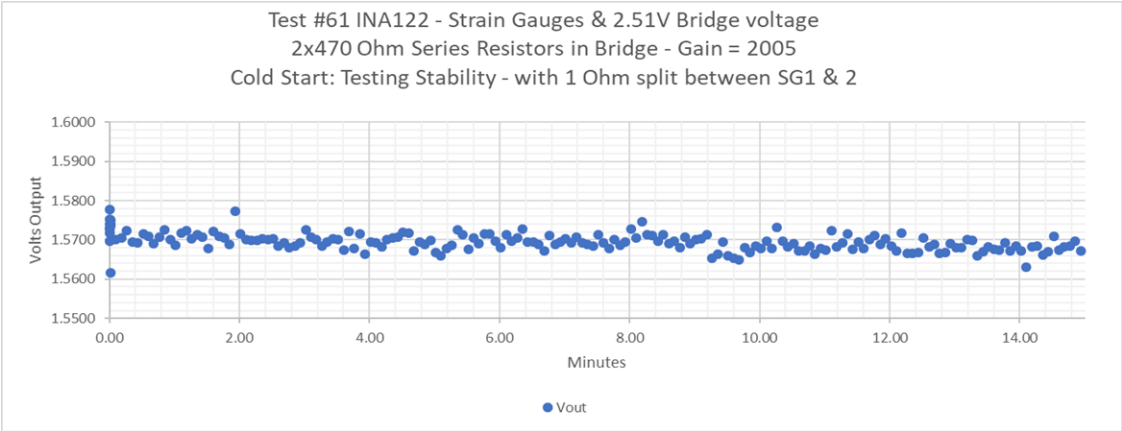
Test #61 INA122 - Strain Gauges & 2.51V Bridge voltage
2x470 Ohm Series Resistors in Bridge - Gain = 2005
Cold Start: Testing Stability - with 1 Ohm split between SG1 & 2
Volts Output
1.6000
1.5900
1.5800
1.5700
1.5600
1.5500
0.00
2.00
4.00
6.00
8.00
10.00
12.00
14.00
Minutes
Vout

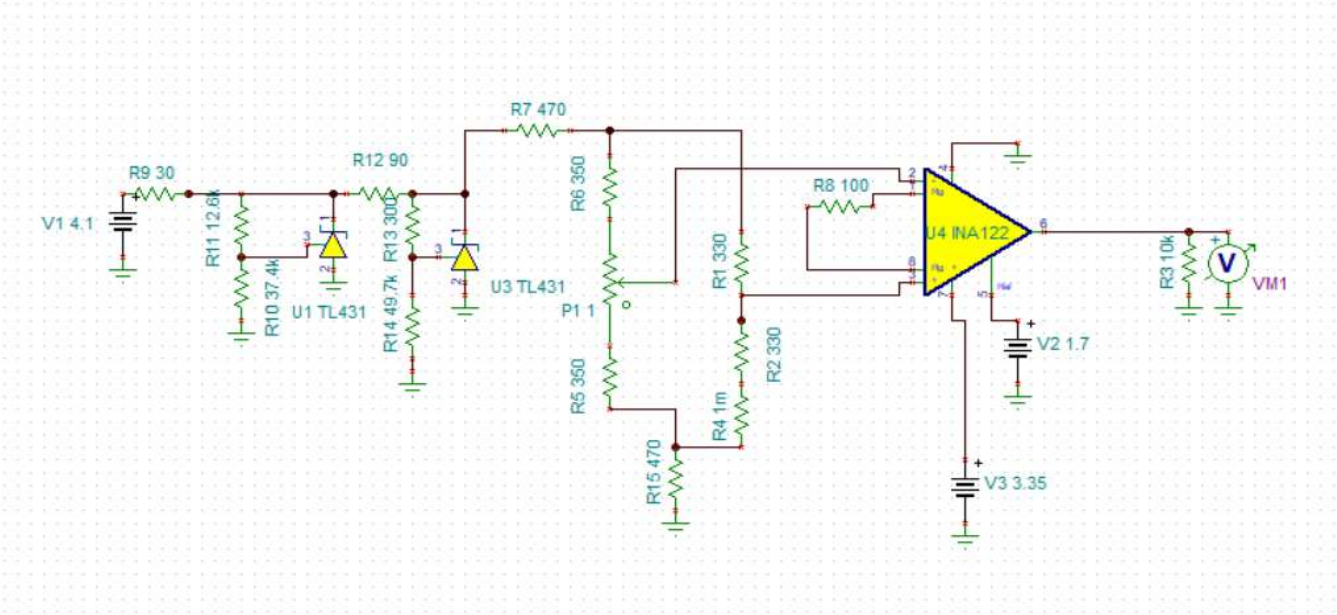
R7 470
R9 30
R12 90
R8 100
V1 4.1
R11 12.6k
R10 37.4k
U1 TL431
R13 300
R14 49.7k
U3 TL431
R6 350
P1 1
R5 350
R15 470
R1 330
R2 330
R4 1m
U4 INA122
V2 1.7
V3 3.35
R3 10k
VM1

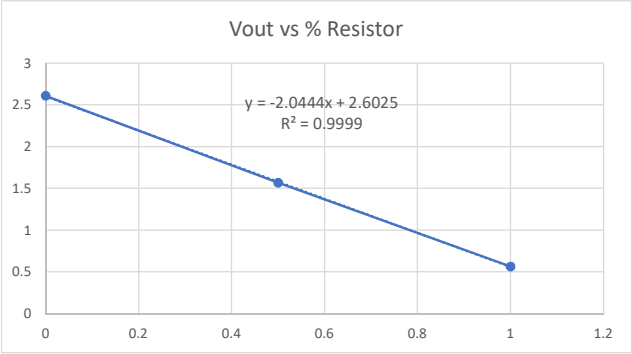
Vout vs % Resistor
y = -2.0444x + 2.6025
R² = 0.9999
3
2.5
2
1.5
1
0.5
0
0
0.2
0.4
0.6
0.8
1
1.2