Stereo class D Amplifier

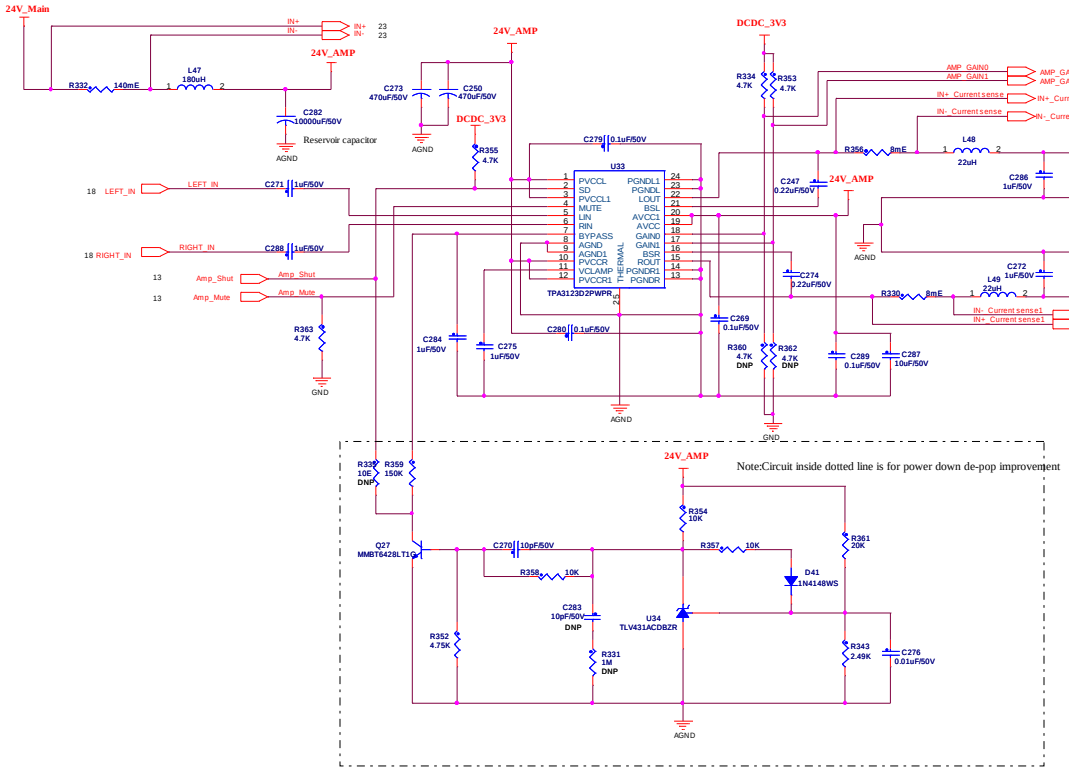
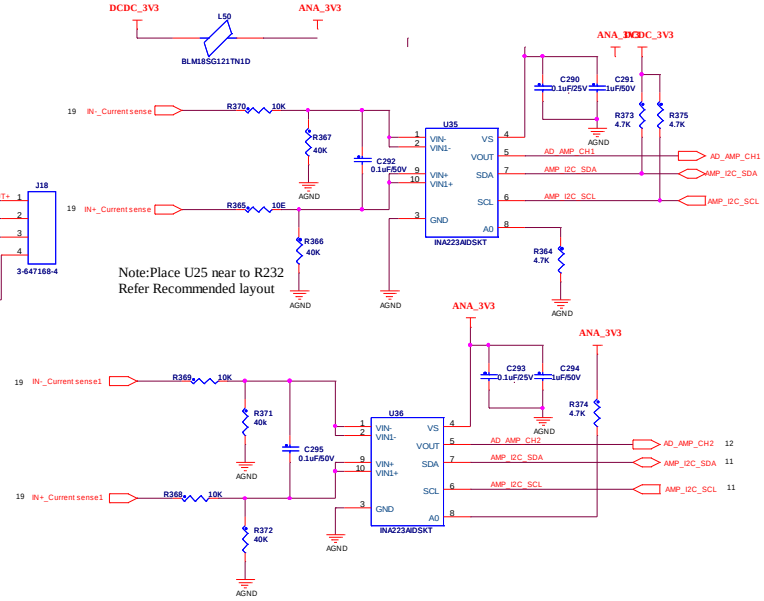
Stereo class D Amplifier Voltage & Current sensing