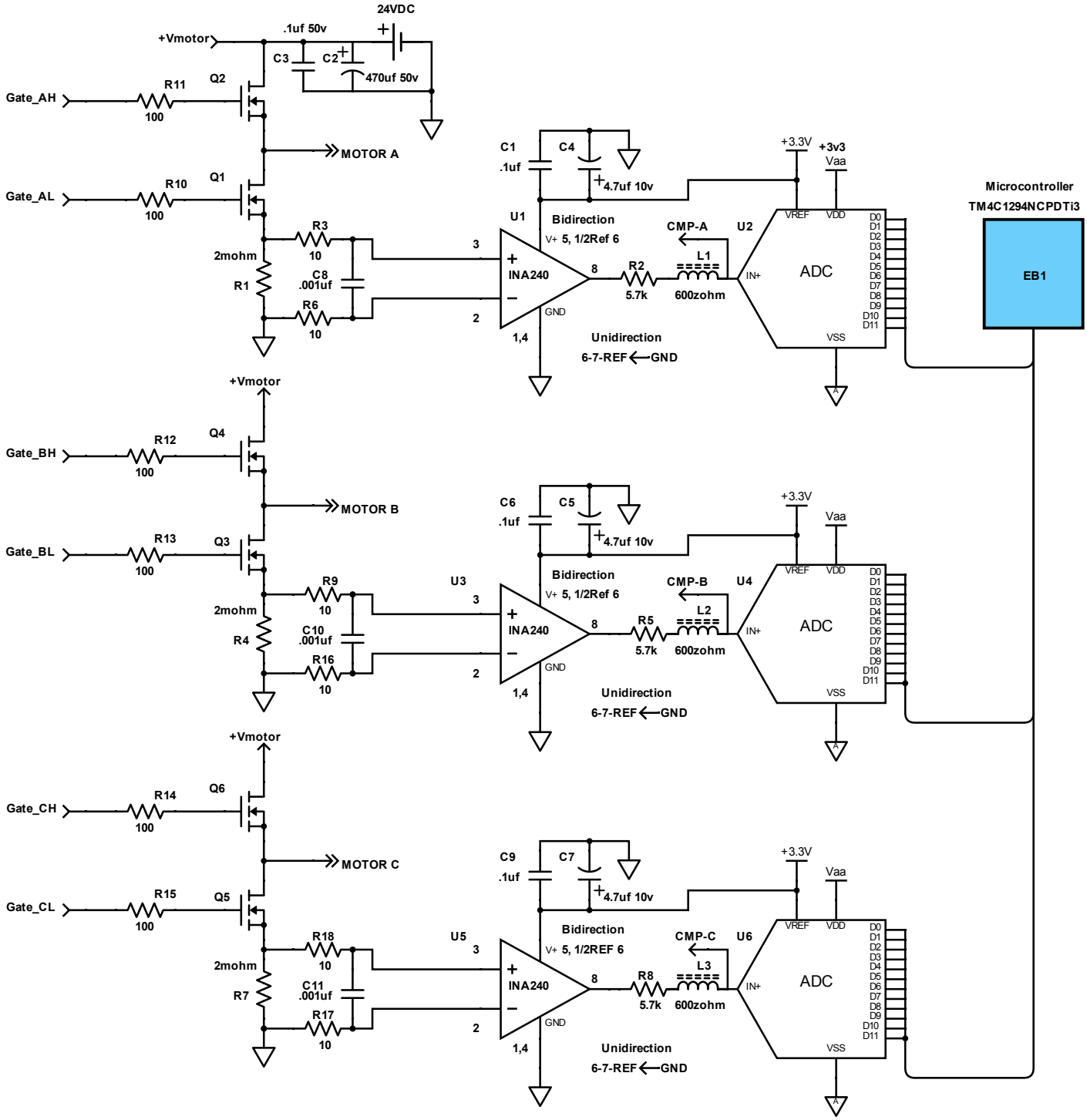
24VDC
+Vmotor
.1uf 50v
C3
C2
470uf 50v
Gate_AH
R11
100
Q2
MOTOR A
Gate_AL
R10
100
Q1
R3
10
2mohm
R1
C8
.001uf
R6
10
C1
.1uf
C4
4.7uf 10v
U1
Bidirection
V+ 5, 1/2Ref 6
INA240
GND
1,4
Unidirection
6-7-REF GND
R2
5.7k
CMP-A
L1
600zohm
U2
+3.3V
+3v3
Vaa
VREF
VDD
IN+
ADC
VSS
D0
D1
D2
D3
D4
D5
D6
D7
D8
D9
D10
D11
Microcontroller
TM4C1294NCPDTi3
EB1
+Vmotor
Gate_BH
R12
100
Q4
MOTOR B
Gate_BL
R13
100
Q3
R9
10
2mohm
R4
C10
.001uf
R16
10
C6
.1uf
C5
4.7uf 10v
U3
Bidirection
V+ 5, 1/2Ref 6
INA240
GND
1,4
Unidirection
6-7-REF GND
R5
5.7k
CMP-B
L2
600zohm
U4
+3.3V
Vaa
VREF
VDD
IN+
ADC
VSS
+Vmotor
Gate_CH
R14
100
Q6
MOTOR C
Gate_CL
R15
100
Q5
R18
10
2mohm
R7
C11
.001uf
R17
10
C9
.1uf
C7
4.7uf 10v
U5
Bidirection
V+ 5, 1/2REF 6
INA240
GND
1,4
Unidirection
6-7-REF GND
R8
5.7k
CMP-C
L3
600zohm
U6
+3.3V
Vaa
VREF
VDD
IN+
ADC
VSS