THIS DOCUMENT AND THE DATA DISCLOSED HEREIN OR HEREWITH IS THE PROPERTY OF ALTIUM LIMITED AND MAY BE FREELY DISTRIBUTED IN WHOLE. NO RIGHTS ARE RESERVED OR EXPRESS OR IMPLIED WARANTEE GIVEN.

REVISION	DESCRIPTION	DATE	APPROVED

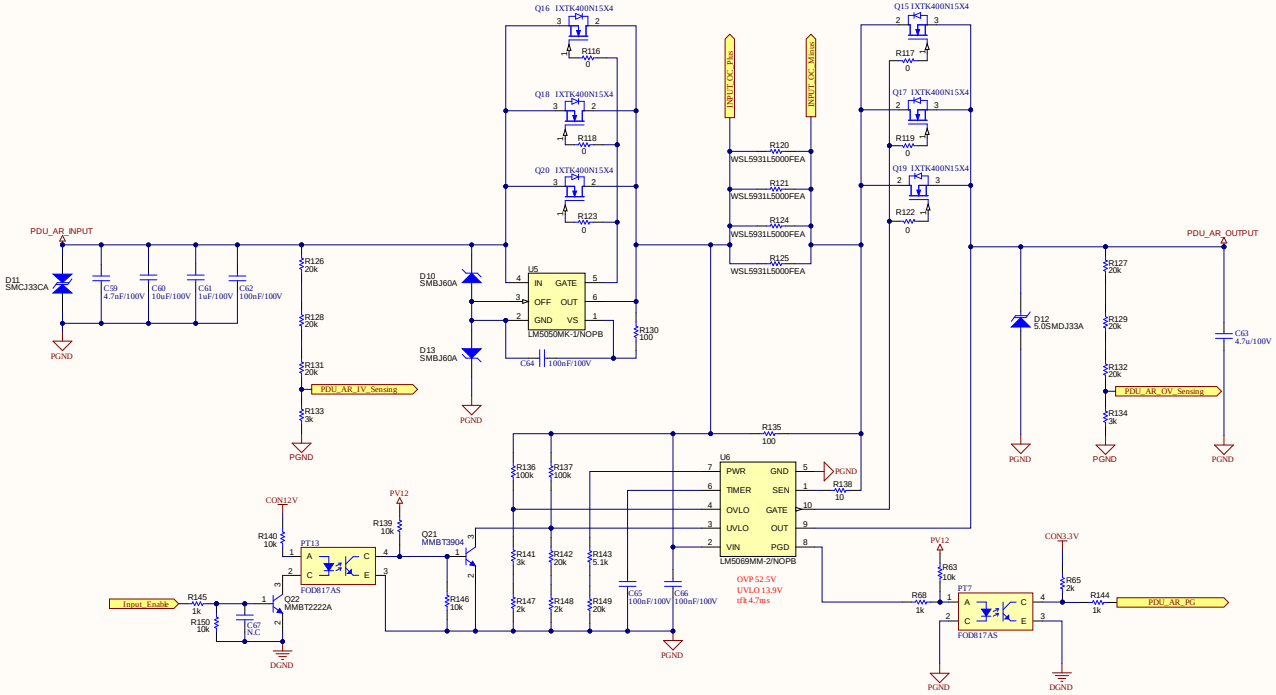

<INPUT>

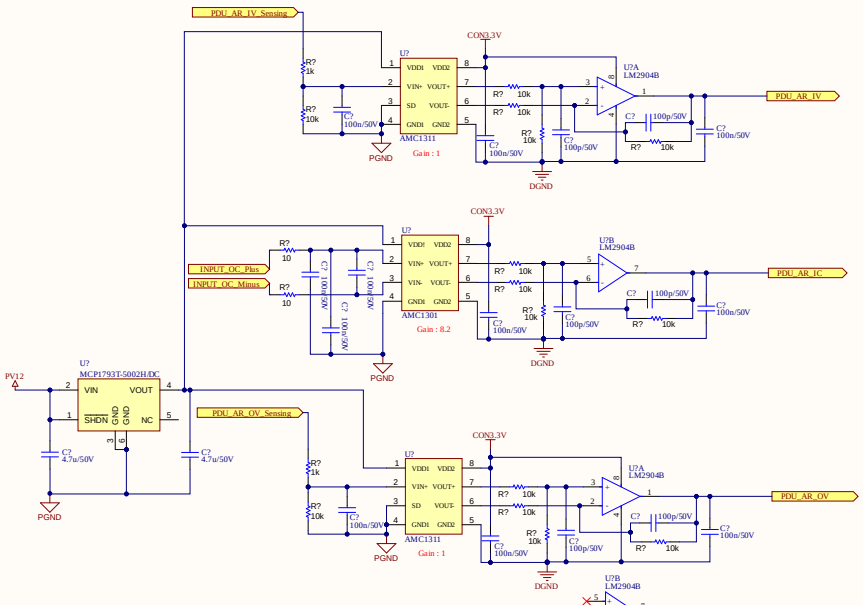

APPROVALS	DATE
ENG:	
DSN:	
CHK:	
REFERENCE DOCUMENTS	
BOM:	
ASSY DWG:	
FAB DWG:	
PCB DWG:	

PROJECT: Altium

PROJECT REVISION: Not in version control | DOCUMENT REVISION: Not in version control | DESIGN ITEM: Not in version control

TITLE: * J1_INPUT POWER

SIZE: A2 | CAGE CODE | DWG NO. | REV

SCALE: | FILE NAME: J1. Input.SchDoc | SHEET 1 OF