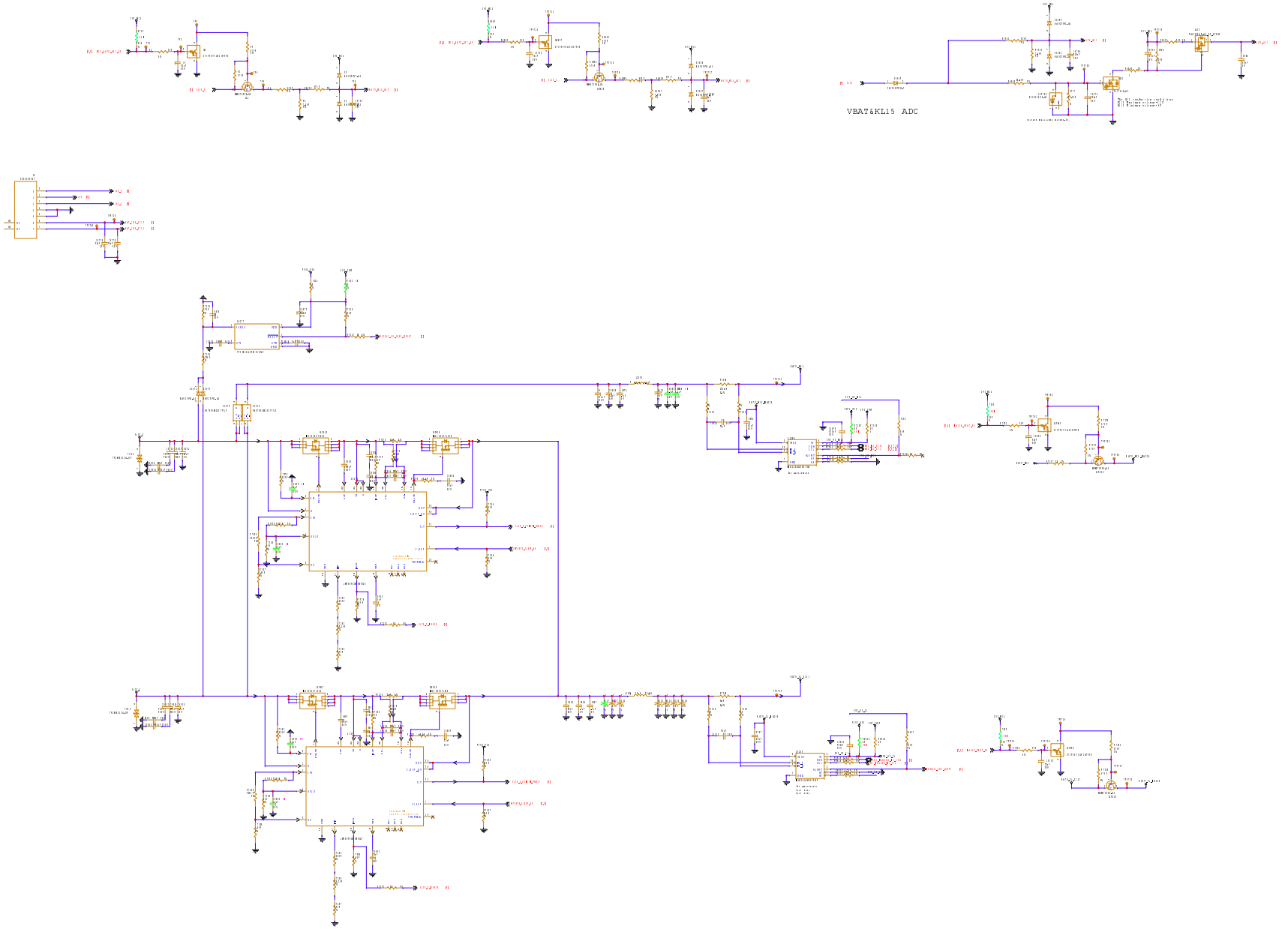
VBAT&KL15 ADC

```
ERROR: undefinedfilename
OFFENDING COMMAND: project

STACK:
```