POWER PRIMARY

SYS_3V3

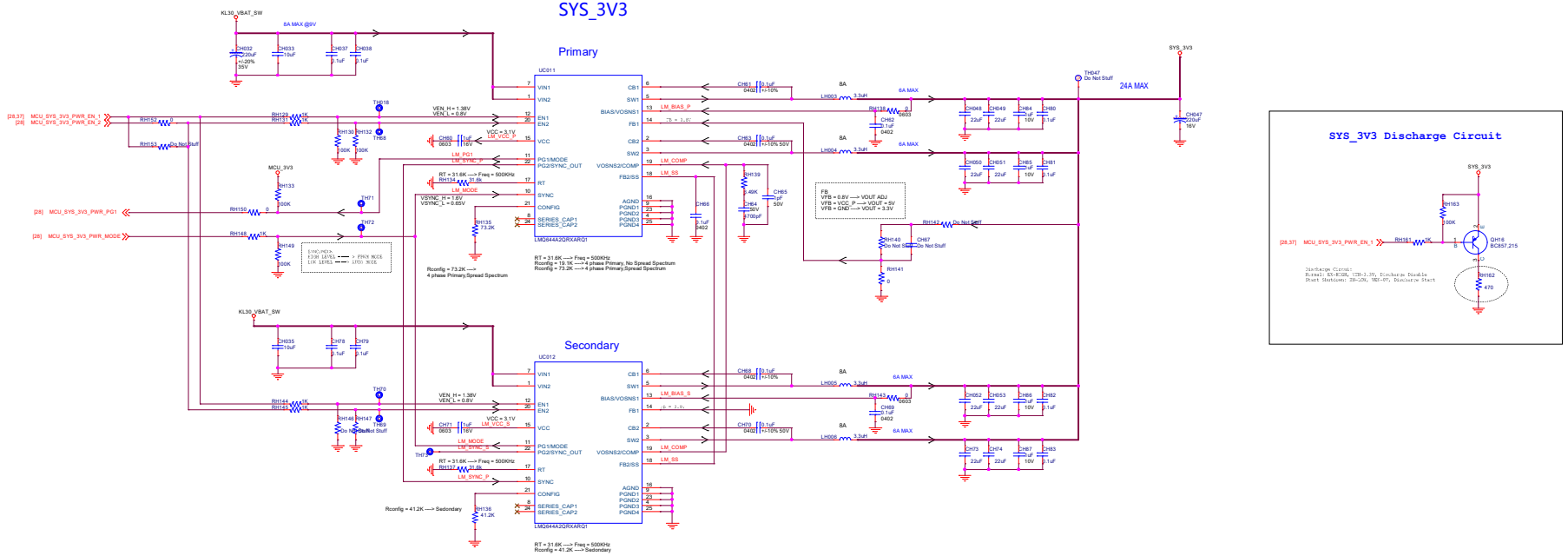

MCU 3V3

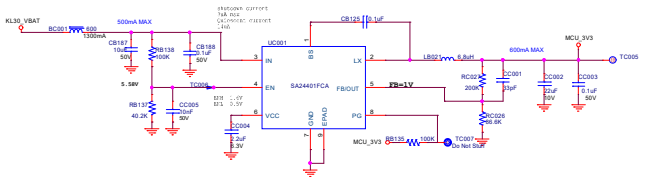

MCU 5V

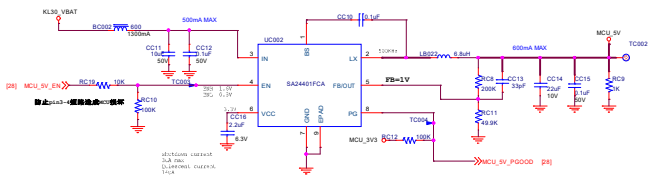

CHANGAN 8295 POC A60 MAX

MEGATRONIX DESIGN CONFIDENTIAL

MEGATRONIX	Function: CHANGAN 8295 MB	
Sheet: 18_2_POWER_PRIMARY	Modified by: <Modifiedby>	Rev: A6
Date: Thu 24 2023	Sheet 26 of 27	