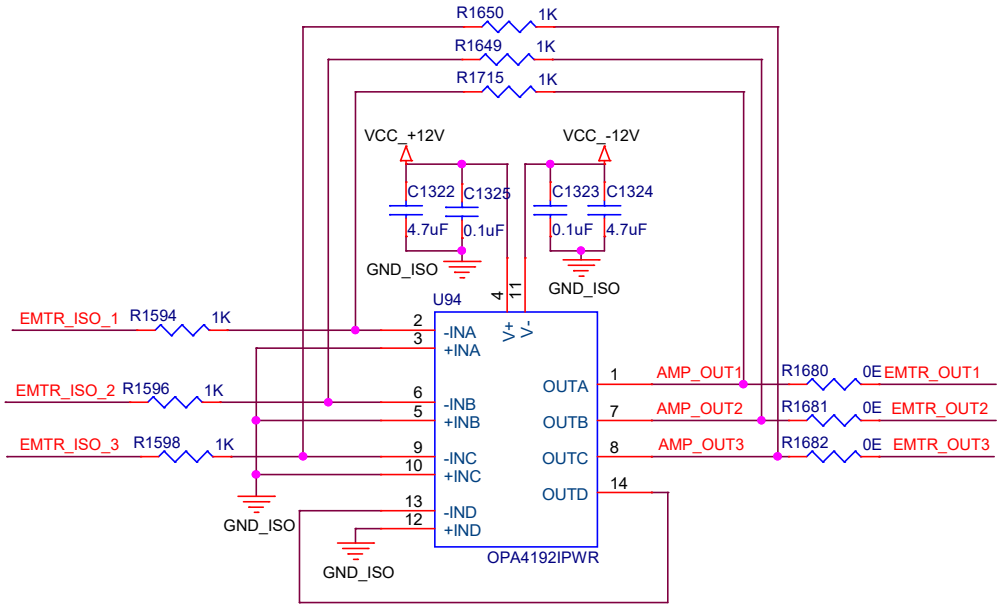OPA4192 AS UNITY GAIN BUFFER