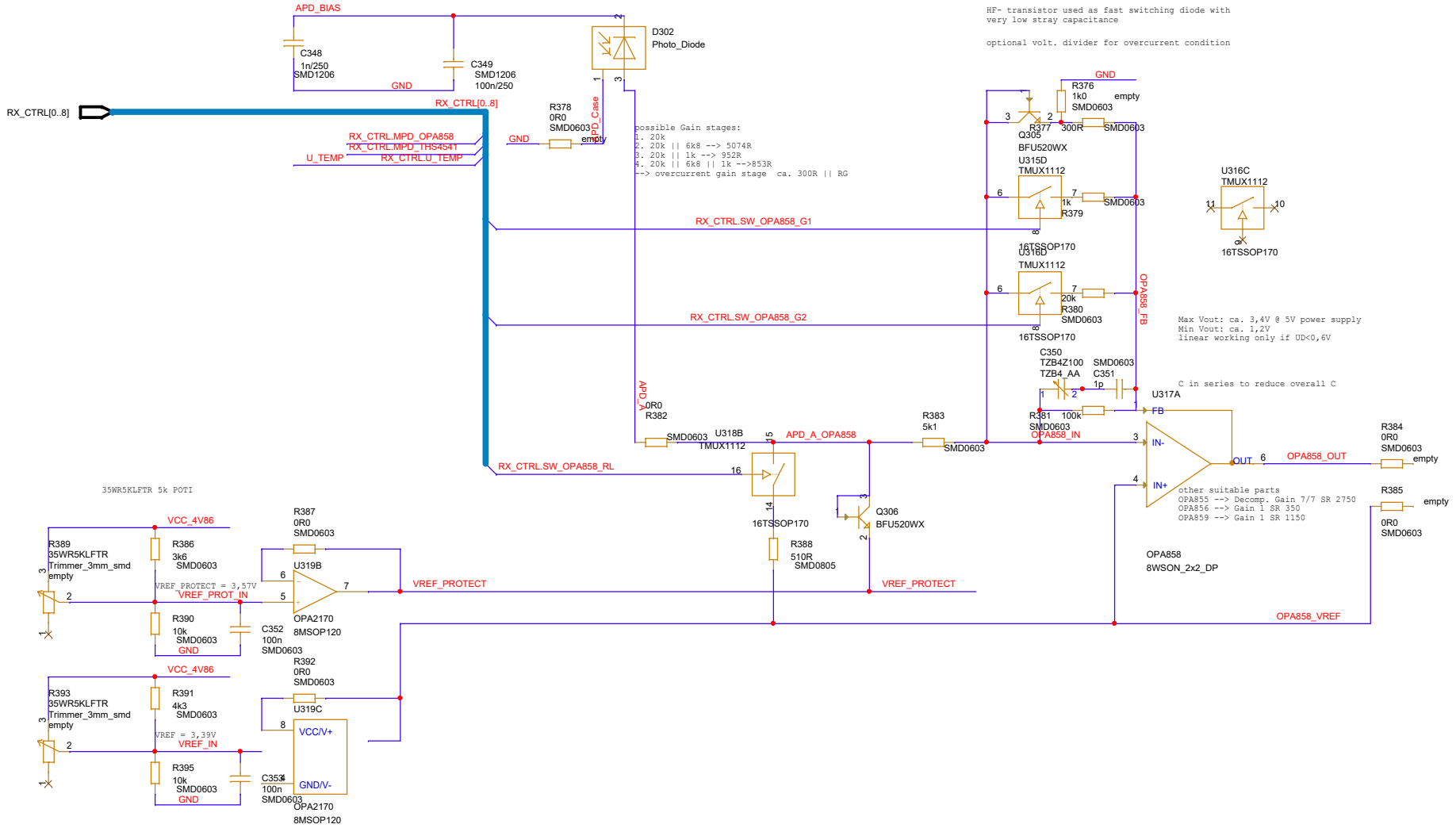
APD_BIAS
C348
1n/250
SMD1206
GND
C349
SMD1206
100n/250
D302
Photo_Diode
RX_CTRL[0..8]
RX_CTRL[0..8]
R378
0R0
SMD0603
empty
APD_Case
GND
RX_CTRL.MPD_OPA858
RX_CTRL.MPD_THS4541
U_TEMP
RX_CTRL.U_TEMP
possible Gain stages:
1. 20k
2. 20k || 6k8 --> 5074R
3. 20k || 1k --> 952R
4. 20k || 6k8 || 1k -->853R
--> overcurrent gain stage ca. 300R || RG
HF- transistor used as fast switching diode with
very low stray capacitance
optional volt. divider for overcurrent condition
GND
R376
1k0
empty
SMD0603
R377
300R
SMD0603
Q305
BFU520WX
U315D
TMUX1112
1k
R379
SMD0603
16TSSOP170
U316C
TMUX1112
16TSSOP170
RX_CTRL.SW_OPA858_G1
U318D
TMUX1112
20k
R380
SMD0603
16TSSOP170
OPA858_FB
RX_CTRL.SW_OPA858_G2
Max Vout: ca. 3,4V @ 5V power supply
Min Vout: ca. 1,2V
linear working only if UD<0,6V
C350
TZB4Z100
TZB4_AA
SMD0603
C351
1p
C in series to reduce overall C
U317A
R381
100k
SMD0603
OPA858_IN
FB
IN-
IN+
OUT
APD_A
0R0
R382
SMD0603
U318B
TMUX1112
APD_A_OPA858
R383
5k1
SMD0603
R384
0R0
SMD0603
empty
OPA858_OUT
RX_CTRL.SW_OPA858_RL
16TSSOP170
Q306
BFU520WX
R388
510R
SMD0805
other suitable parts
OPA855 --> Decomp. Gain 7/7 SR 2750
OPA856 --> Gain 1 SR 350
OPA859 --> Gain 1 SR 1150
R385
empty
0R0
SMD0603
OPA858
8WSON_2x2_DP
35WR5KLFTR 5k POTI
VCC_4V86
R389
35WR5KLFTR
Trimmer_3mm_smd
empty
R386
3k6
SMD0603
VREF_PROTECT = 3,57V
VREF_PROT_IN
R390
10k
SMD0603
GND
R387
0R0
SMD0603
U319B
OPA2170
8MSOP120
C352
100n
SMD0603
VREF_PROTECT
VREF_PROTECT
OPA858_VREF
VCC_4V86
R393
35WR5KLFTR
Trimmer_3mm_smd
empty
R391
4k3
SMD0603
VREF = 3,39V
VREF_IN
R395
10k
SMD0603
GND
R392
0R0
SMD0603
U319C
VCC/V+
GND/V-
C353
100n
SMD0603
OPA2170
8MSOP120