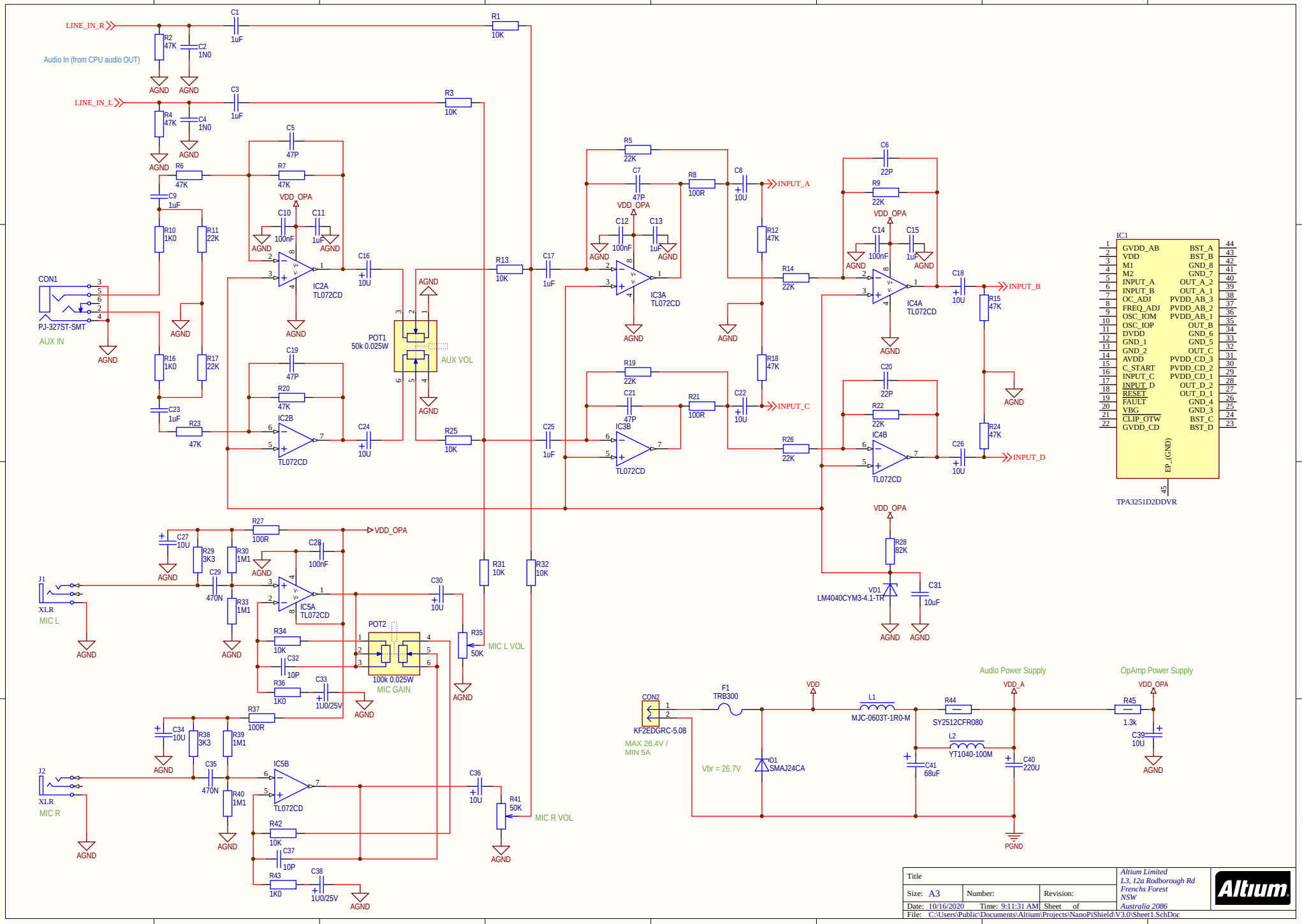
LINE_IN_R
LINE_IN_L
Audio In (from CPU audio OUT)
C1 1uF
C2 1N0
C3 1uF
C4 1N0
R1 10K
R2 47K
R3 10K
R4 47K
R6 47K
R7 47K
C5 47P
C9 1uF
C10 100nF
C11 1uF
VDD_OPA
IC2A TL072CD
C16 10U
R10 1K0
R11 22K
R16 1K0
R17 22K
CON1
PJ-327ST-SMT
AUX IN
POT1 50k 0.025W
AUX VOL
C19 47P
R20 47K
IC2B TL072CD
C23 1uF
R23 47K
C24 10U
R25 10K
R13 10K
C17 1uF
C25 1uF
R5 22K
C7 47P
R8 100R
C8 10U
INPUT_A
C12 100nF
C13 1uF
IC3A TL072CD
R12 47K
R14 22K
R18 47K
R19 22K
C21 47P
R21 100R
C22 10U
INPUT_C
IC3B TL072CD
R26 22K
C6 22P
R9 22K
C14 100nF
C15 1uF
IC4A TL072CD
C18 10U
INPUT_B
R15 47K
C20 22P
R22 22K
IC4B TL072CD
C26 10U
R24 47K
INPUT_D
IC1
TPA3251D2DDVR
GVDD_AB
VDD
M1
M2
INPUT_A
INPUT_B
OC_ADJ
FREQ_ADJ
OSC_IOM
OSC_IOP
DVDD
GND_1
GND_2
AVDD
C_START
INPUT_C
INPUT_D
RESET
FAULT
VBG
CLIP_OTW
GVDD_CD
BST_A
BST_B
GND_8
GND_7
OUT_A_2
OUT_A_1
PVDD_AB_3
PVDD_AB_2
PVDD_AB_1
OUT_B
GND_6
GND_5
OUT_C
PVDD_CD_3
PVDD_CD_2
PVDD_CD_1
OUT_D_2
OUT_D_1
GND_4
GND_3
BST_C
BST_D
EP_(GND)
R28 82K
VD1 LM4040CYM3-4.1-TR
C31 10uF
J1
XLR
MIC L
C27 10U
R29 3K3
R30 1M1
R27 100R
C28 100nF
C29 470N
R33 1M1
IC5A TL072CD
C30 10U
R31 10K
R32 10K
POT2
100k 0.025W
MIC GAIN
R34 10K
C32 10P
R36 1K0
C33 1U0/25V
R35 50K
MIC L VOL
J2
XLR
MIC R
C34 10U
R38 3K3
R39 1M1
R37 100R
C35 470N
R40 1M1
IC5B TL072CD
C36 10U
R41 50K
MIC R VOL
R42 10K
C37 10P
R43 1K0
C38 1U0/25V
CON2
KF2EDGRC-5.08
MAX 26.4V / MIN 5A
F1 TRB300
Vbr = 26.7V
D1 SMAJ24CA
VDD
L1 MJC-0603T-1R0-M
R44 SY2512CFR080
L2 YT1040-100M
C41 68uF
C40 220U
Audio Power Supply
VDD_A
OpAmp Power Supply
R45 1.3k
C39 10U
AGND
PGND
Title
Size: A3
Number:
Revision:
Date: 10/16/2020
Time: 9:11:31 AM
Sheet of
File: C:\Users\Public\Documents\Altium\Projects\NanoPiShield\V3.0\Sheet1.SchDoc
Altium Limited
L3, 12a Rodborough Rd
Frenchs Forest
NSW
Australia 2086
Altium