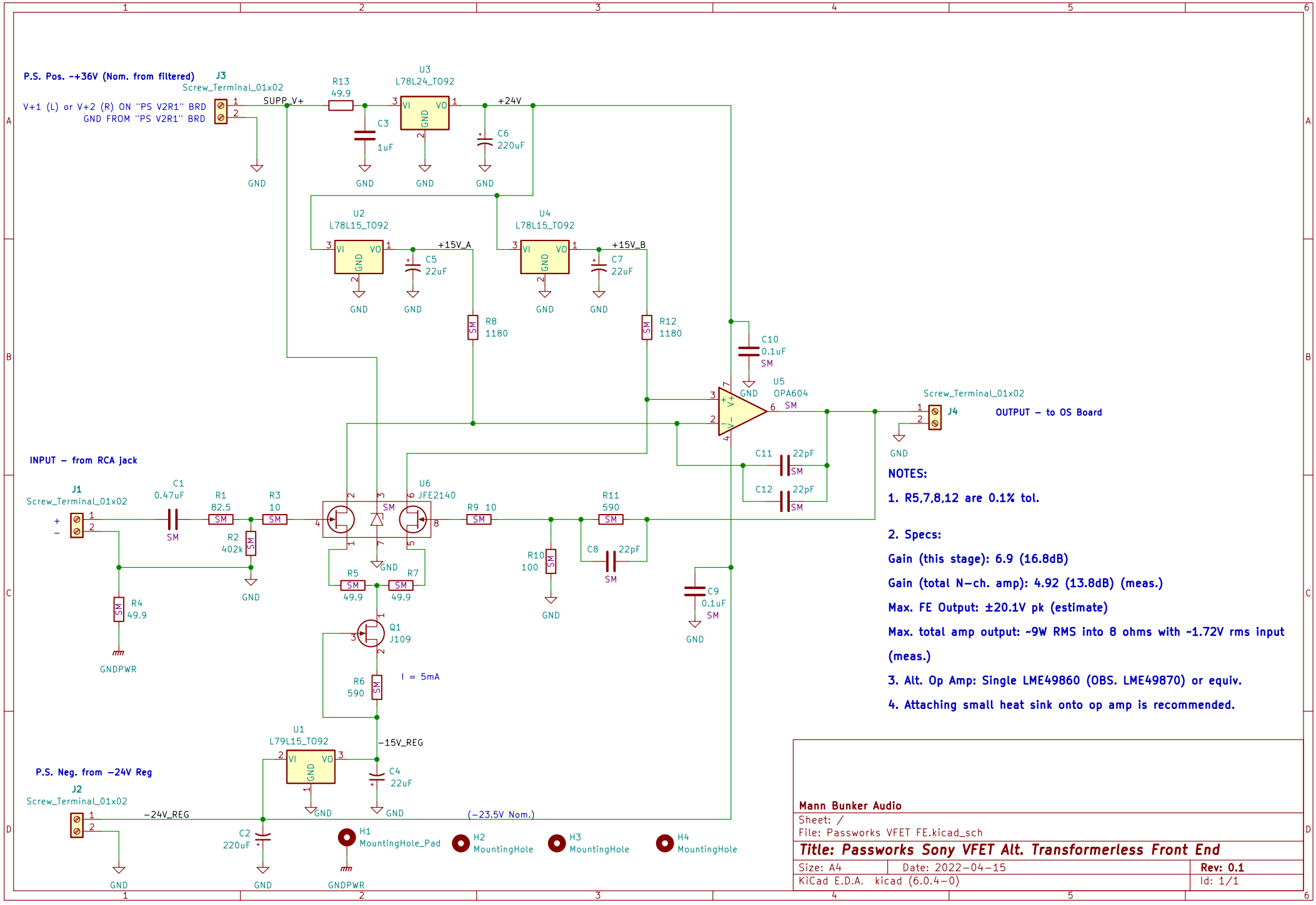

NOTES:

1. R5,7,8,12 are 0.1% tol.

2. Specs:

Gain (this stage): 6.9 (16.8dB)

Gain (total N-ch. amp): 4.92 (13.8dB) (meas.)

Max. FE Output: ±20.1V pk (estimate)

Max. total amp output: ~9W RMS into 8 ohms with ~1.72V rms input (meas.)

3. Alt. Op Amp: Single LME49860 (OBS. LME49870) or equiv.

4. Attaching small heat sink onto op amp is recommended.

Mann Bunker Audio

Sheet: /

File: Passworks VFET FE.kicad_sch

Title: Passworks Sony VFET Alt. Transformerless Front End

Size: A4	Date: 2022-04-15	Rev: 0.1
KiCad E.D.A. kicad (6.0.4-0)		Id: 1/1