REVISION RECORD			
LTR	ECO NO:	APPROVED:	DATE:

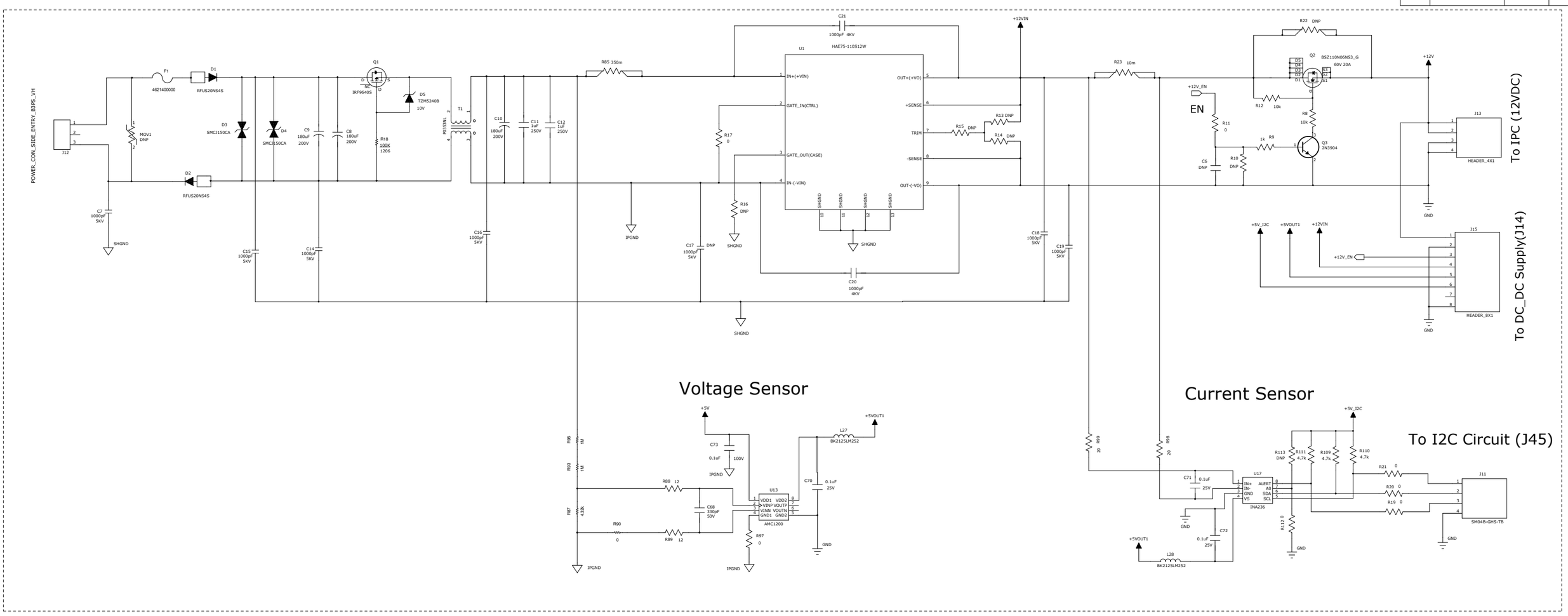

DC POWER LINE FILTER

Do Not Populate

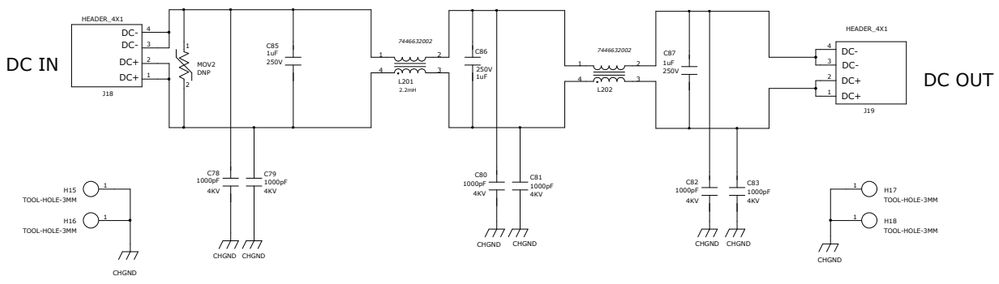

12V SUPERCAP MODULE

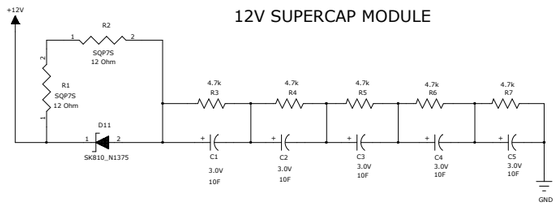

Vltg Sply =12V R1=12 R2=12

Charging period, t	Charge Hold, V	Power hold period, t
2 mins	10.8V	2.5s
3 mins	11.5V	4.8s
4 mins	11.75V	7.1s
5 mins	12V	8s

MOUNTING HOLE

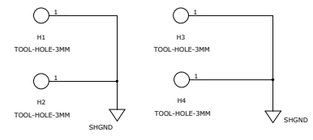

DRAWN: Ku	DATED: 11/04/2023	COMPANY: RFNet Tecnologies Pte Ltd	
CHECKED: Nelson	DATED: 31/07/2023	TITLE: DC Power Supply	
QUALITY CONTROL:	DATED:	CODE:	SIZE: D / DRAWING NO: SCH-1096 / REV: 00
RELEASED:	DATED:	SCALE:	SHEET: 3 OF 8