AUDIO CODEC

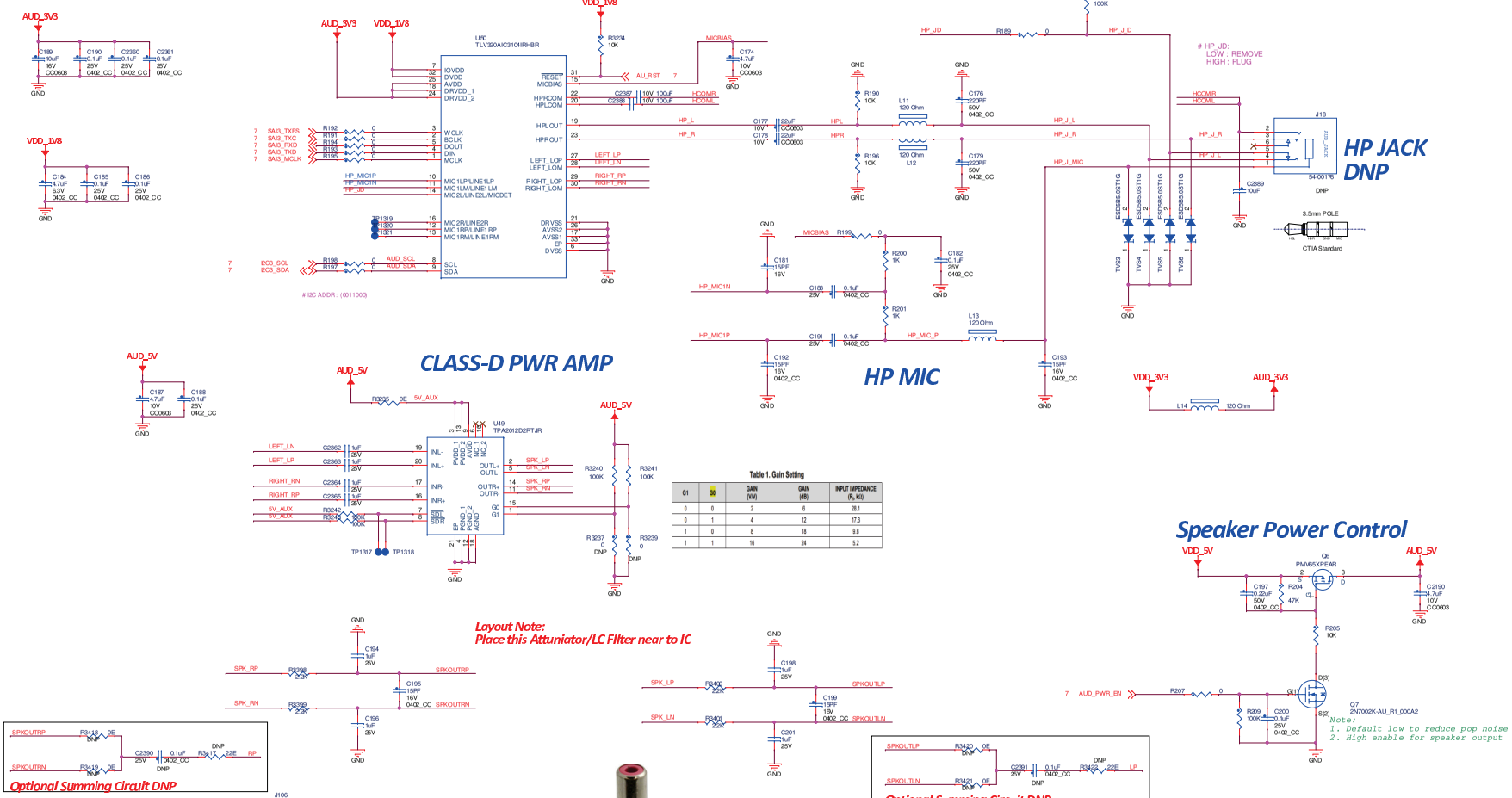

G1	G0	GAIN (W)	GAIN (dB)	INPUT IMPEDANCE (RI, kΩ)
0	0	2	6	26.1
0	1	4	12	17.3
1	0	8	18	9.8
1	1	16	24	5.2

OptM Media Solutions Pvt. Ltd.

PROJECT: INFOTAINMENT_REV1.0

TITTLE: AUDIO CODEC

Size	CAGE Code	DWG NO	Rev
A2	1.0	OptM_INF_01	2.0

Scale 1:1 | Friday, September 12, 2025 | Sheet 12 of 22