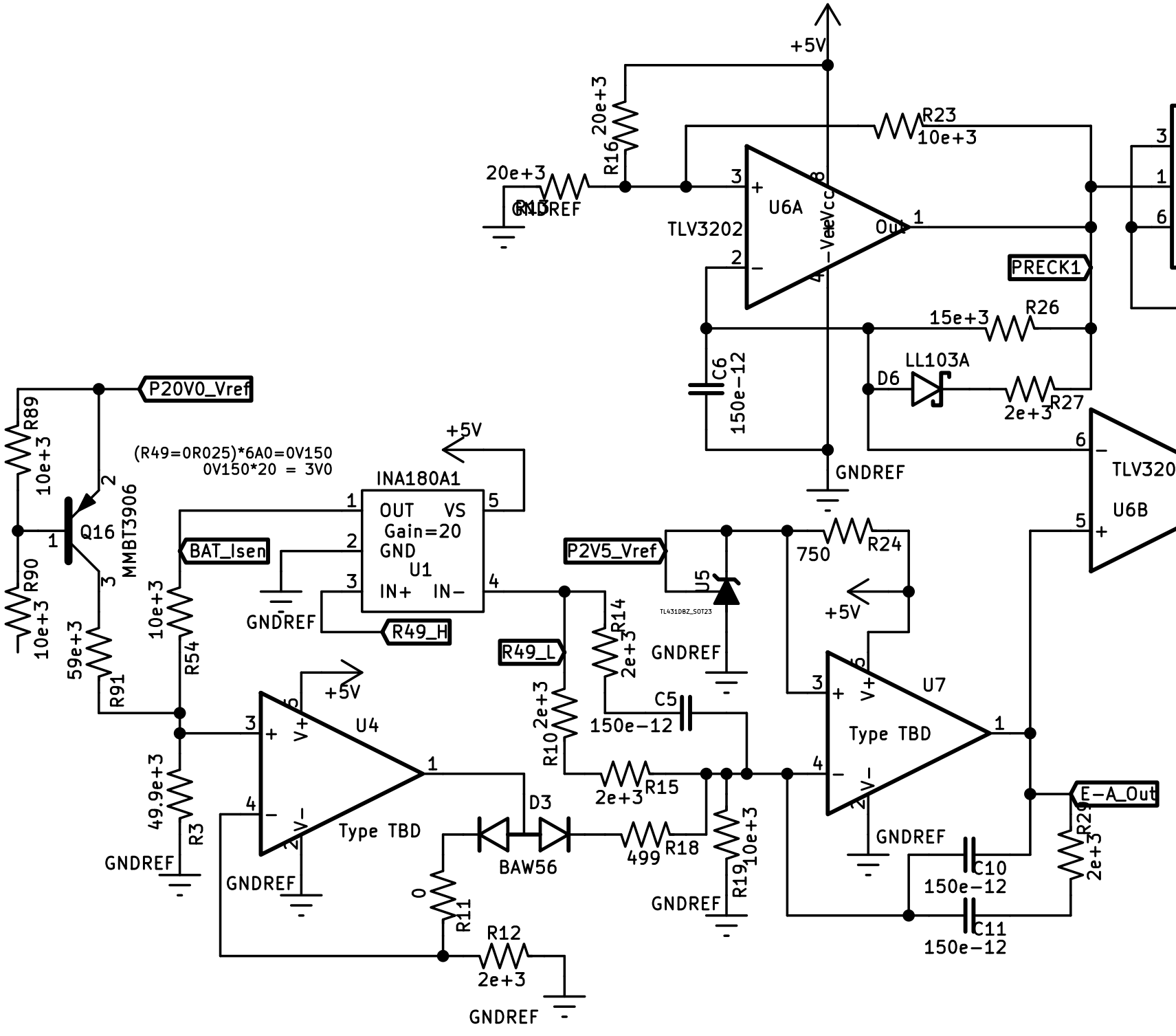
+5V
R16
20e+3
R23
10e+3
20e+3
R15
GNDREF
U6A
TLV3202
Vcc
Vee
Out
PRECK1
15e+3
R26
C6
150e-12
LL103A
D6
2e+3
R27
GNDREF
TLV320
U6B
P20V0_Vref
R89
10e+3
(R49=0R025)*6A0=0V150
0V150*20 = 3V0
Q16
MMBT3906
R90
10e+3
59e+3
R91
INA180A1
OUT VS
Gain=20
GND
U1
IN+ IN-
BAT_Isen
10e+3
R54
GNDREF
R49_H
+5V
P2V5_Vref
U5
TL431DBZ_SOT23
750
R24
R49_L
R14
2e+3
GNDREF
+5V
U4
Type TBD
49.9e+3
R3
GNDREF
GNDREF
R10
2e+3
C5
150e-12
R15
2e+3
D3
BAW56
499
R18
R19
10e+3
GNDREF
0
R11
R12
2e+3
GNDREF
U7
Type TBD
GNDREF
C10
150e-12
C11
150e-12
E-A_Out
R29
2e+3