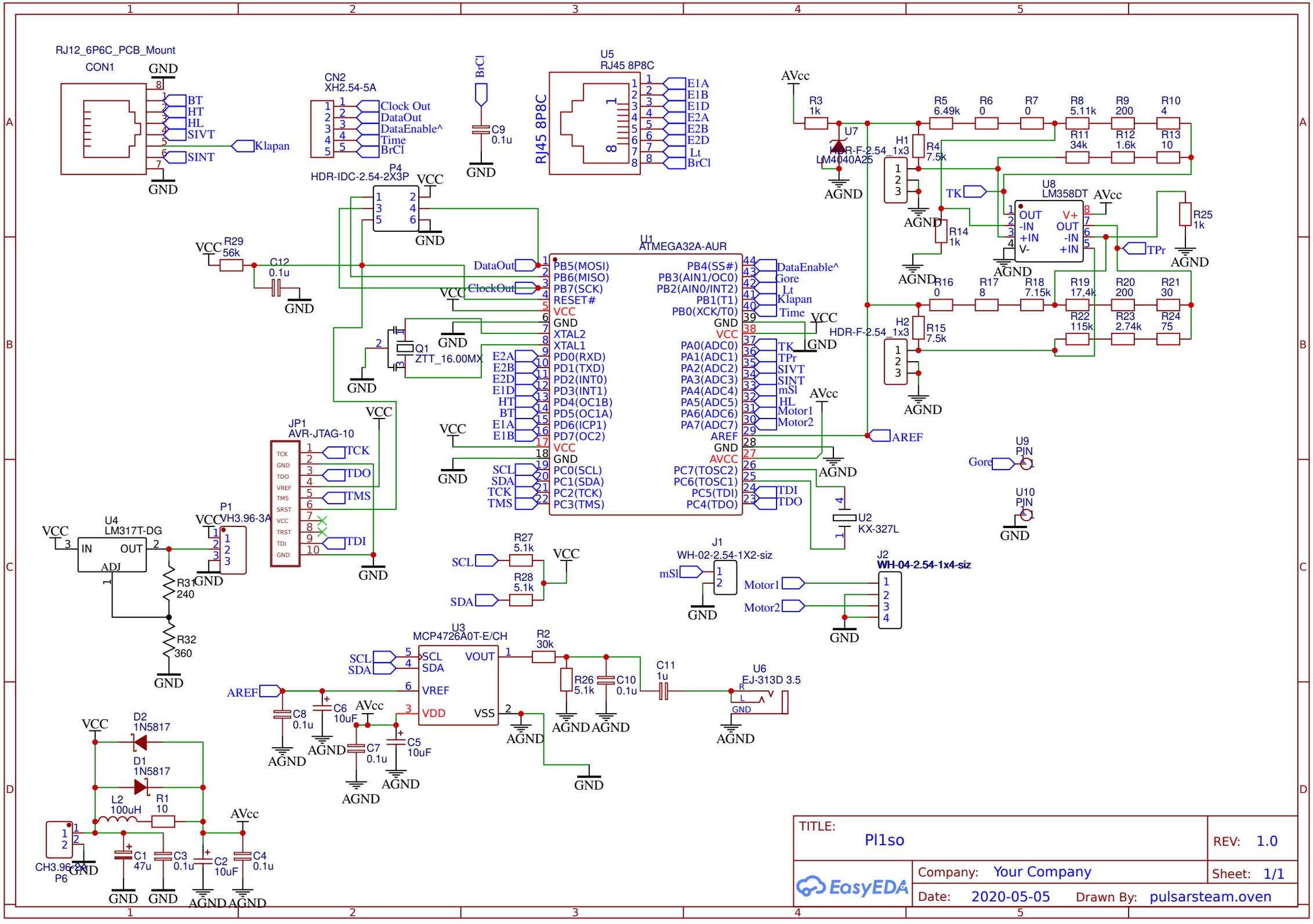
RJ12_6P6C_PCB_Mount
CON1
GND
BT
HT
HL
SIVT
SINT
Klapan
CN2
XH2.54-5A
Clock Out
DataOut
DataEnable^
Time
BrCl
P4
HDR-IDC-2.54-2X3P
VCC
BrCl
C9
0.1u
U5
RJ45 8P8C
E1A
E1B
E1D
E2A
E2B
E2D
Lt
BrCl
AVcc
R3
1k
U7
LM4040A25
AGND
R5
6.49k
R6
0
R7
0
R8
5.11k
R9
200
R10
4
R11
34k
R12
1.6k
R13
10
H1
HDR-F-2.54_1x3
R4
7.5k
TK
U8
LM358DT
OUT
-IN
+IN
V-
V+
R25
1k
TPr
R14
1k
R29
56k
C12
0.1u
U1
ATMEGA32A-AUR
DataOut
ClockOut
PB5(MOSI)
PB6(MISO)
PB7(SCK)
RESET#
VCC
GND
XTAL2
XTAL1
PD0(RXD)
PD1(TXD)
PD2(INT0)
PD3(INT1)
PD4(OC1B)
PD5(OC1A)
PD6(ICP1)
PD7(OC2)
PC0(SCL)
PC1(SDA)
PC2(TCK)
PC3(TMS)
PB4(SS#)
PB3(AIN1/OC0)
PB2(AIN0/INT2)
PB1(T1)
PB0(XCK/T0)
PA0(ADC0)
PA1(ADC1)
PA2(ADC2)
PA3(ADC3)
PA4(ADC4)
PA5(ADC5)
PA6(ADC6)
PA7(ADC7)
AREF
AVCC
PC7(TOSC2)
PC6(TOSC1)
PC5(TDI)
PC4(TDO)
DataEnable^
Gore
Lt
Klapan
Time
TK
TPr
SIVT
SINT
mSl
HL
Motor1
Motor2
TDI
TDO
Q1
ZTT_16.00MX
R16
0
R17
8
R18
7.15k
R19
17,4k
R20
200
R21
30
R22
115k
R23
2.74k
R24
75
H2
HDR-F-2.54_1x3
R15
7.5k
U9
PIN
U10
PIN
U2
KX-327L
JP1
AVR-JTAG-10
TCK
TDO
TMS
TDI
U4
LM317T-DG
IN
OUT
ADJ
P1
VH3.96-3A
R31
240
R32
360
R27
5.1k
R28
5.1k
SCL
SDA
J1
WH-02-2.54-1X2-siz
mSl
J2
WH-04-2.54-1x4-siz
U3
MCP4726A0T-E/CH
VOUT
VREF
VDD
VSS
R2
30k
R26
5.1k
C10
0.1u
C11
1u
U6
EJ-313D 3.5
R
L
GND
AREF
C8
0.1u
C6
10uF
C7
0.1u
C5
10uF
D2
1N5817
D1
1N5817
L2
100uH
R1
10
CH3.96-2A
P6
C1
47u
C3
0.1u
C2
10uF
C4
0.1u
TITLE:
Pl1so
REV: 1.0
Company: Your Company
Sheet: 1/1
Date: 2020-05-05
Drawn By: pulsarsteam.oven
EasyEDA