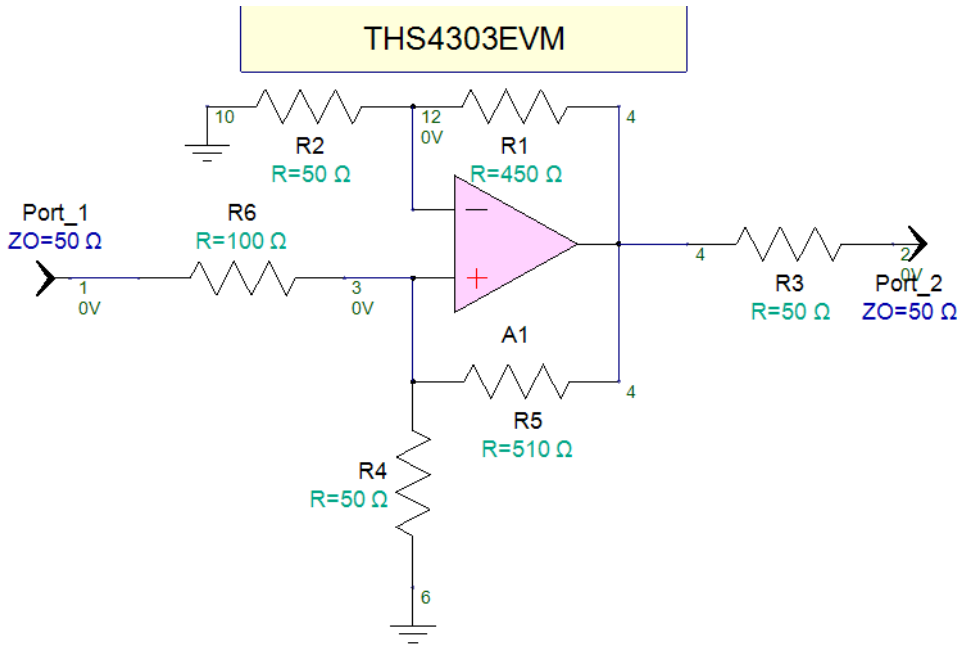
THS4303EVM
10
R2
R=50 Ω
12
0V
R1
R=450 Ω
4
Port_1
ZO=50 Ω
R6
R=100 Ω
1
0V
3
0V
A1
4
R3
R=50 Ω
2
0V
Port_2
ZO=50 Ω
4
R5
R=510 Ω
R4
R=50 Ω
6

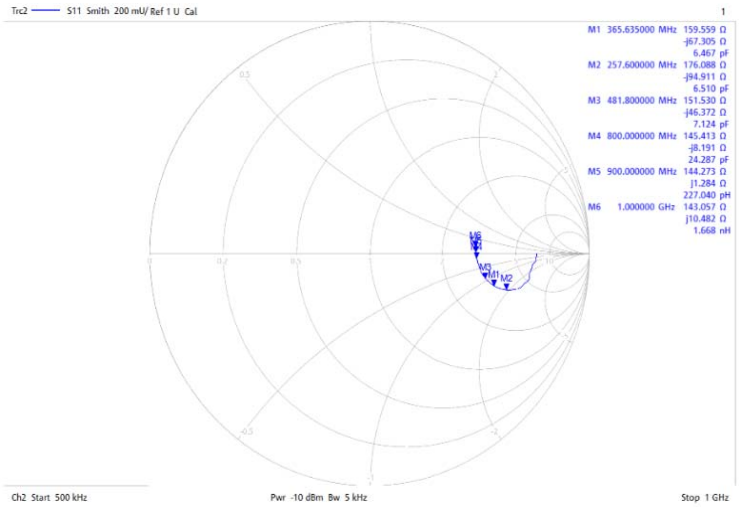
Trc2 S11 Smith 200 mU/ Ref 1 U Cal
1
M1 365.635000 MHz 159.559 Ω -j67.305 Ω 6.467 pF
M2 257.600000 MHz 176.088 Ω -j94.911 Ω 6.510 pF
M3 481.800000 MHz 151.530 Ω -j46.372 Ω 7.124 pF
M4 800.000000 MHz 145.413 Ω -j8.191 Ω 24.287 pF
M5 900.000000 MHz 144.273 Ω j1.284 Ω 227.040 pH
M6 1.000000 GHz 143.057 Ω j10.482 Ω 1.668 nH
Ch2 Start 500 kHz
Pwr -10 dBm Bw 5 kHz
Stop 1 GHz

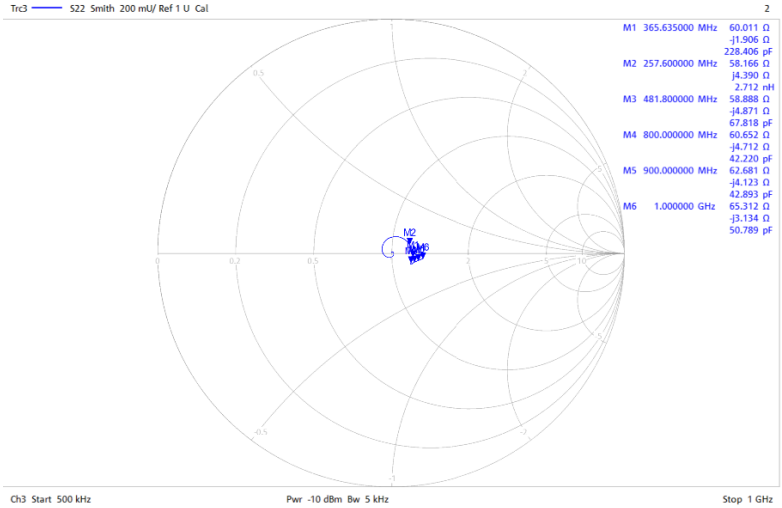
Trc3 S22 Smith 200 mU/ Ref 1 U Cal
2
M1 365.635000 MHz 60.011 Ω -j1.906 Ω 228.406 pF
M2 257.600000 MHz 58.166 Ω j4.390 Ω 2.712 nH
M3 481.800000 MHz 58.888 Ω -j4.871 Ω 67.818 pF
M4 800.000000 MHz 60.652 Ω -j4.712 Ω 42.220 pF
M5 900.000000 MHz 62.681 Ω -j4.123 Ω 42.893 pF
M6 1.000000 GHz 65.312 Ω -j3.134 Ω 50.789 pF
Ch3 Start 500 kHz
Pwr -10 dBm Bw 5 kHz
Stop 1 GHz

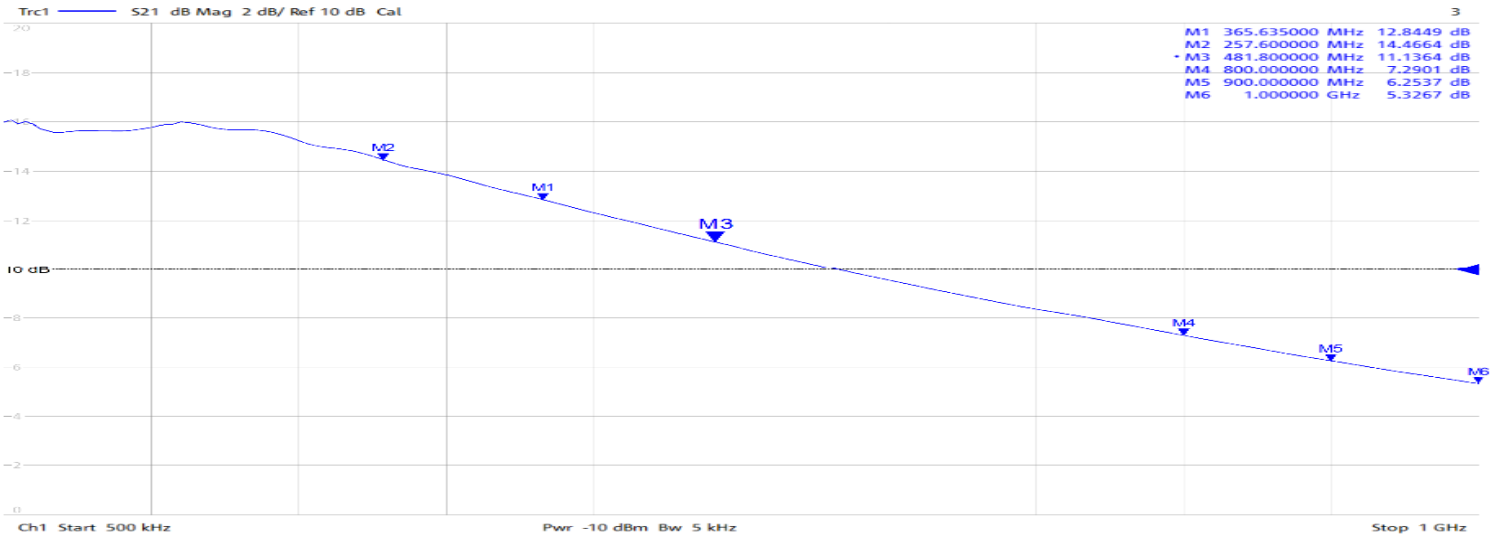
Trc1 S21 dB Mag 2 dB/ Ref 10 dB Cal
3
M1 365.635000 MHz 12.8449 dB
M2 257.600000 MHz 14.4664 dB
M3 481.800000 MHz 11.1364 dB
M4 800.000000 MHz 7.2901 dB
M5 900.000000 MHz 6.2537 dB
M6 1.000000 GHz 5.3267 dB
10 dB
Ch1 Start 500 kHz
Pwr -10 dBm Bw 5 kHz
Stop 1 GHz