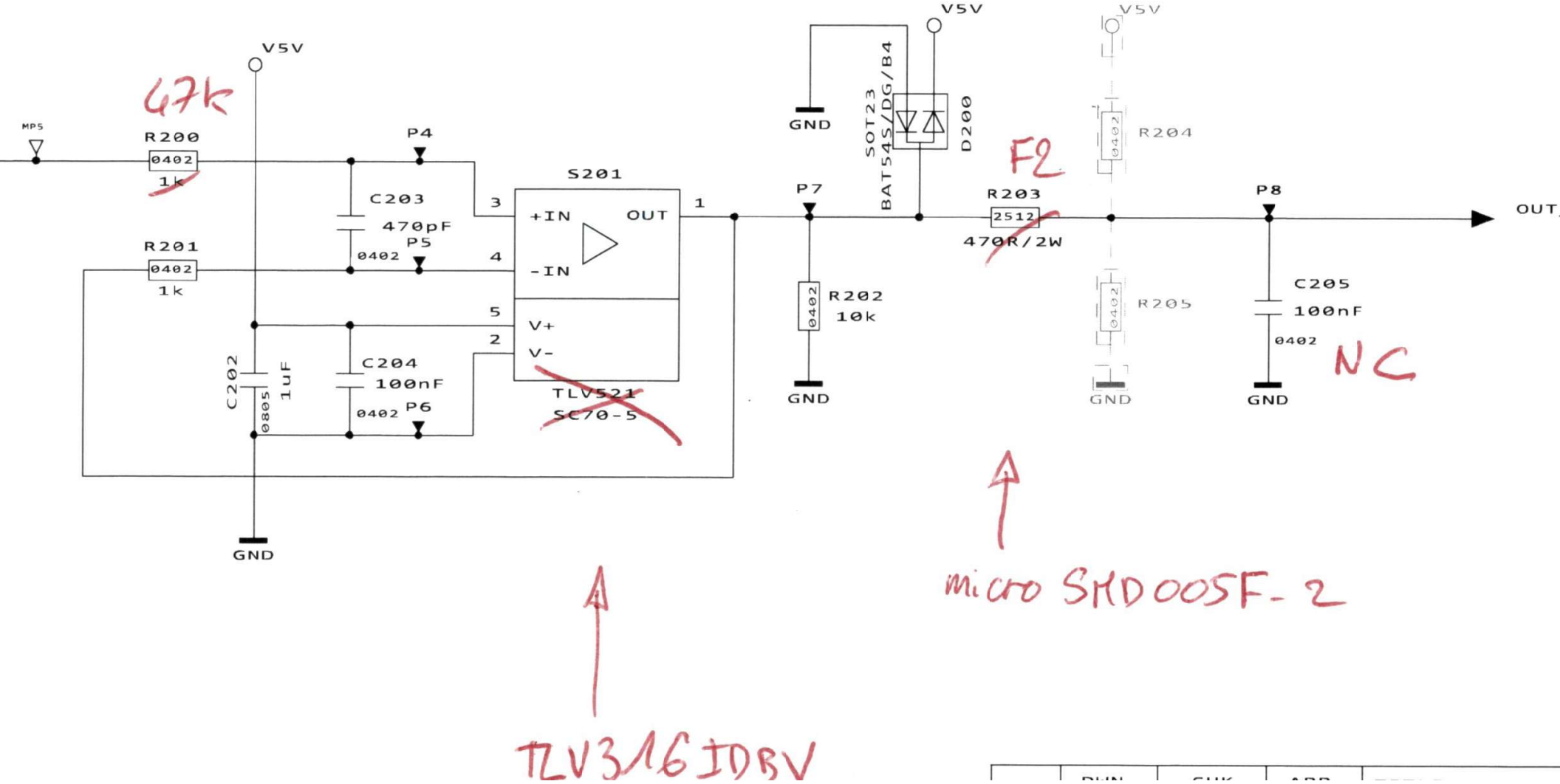
MPS
R200
0402
1k
47k
V5V
P4
C203
470pF
0402
P5
R201
0402
1k
C202
0805
1uF
C204
100nF
0402
P6
GND
S201
+IN
OUT
-IN
V+
V-
TLV521
SC70-5
3
4
5
2
1
P7
R202
0402
10k
GND
SOT23
BAT54S/DG/B4
D200
V5V
GND
R203
2512
470R/2W
F2
V5V
R204
0402
R205
0402
GND
P8
C205
100nF
0402
GND
NC
OUT
micro SMD005F-2
TLV316IDBV