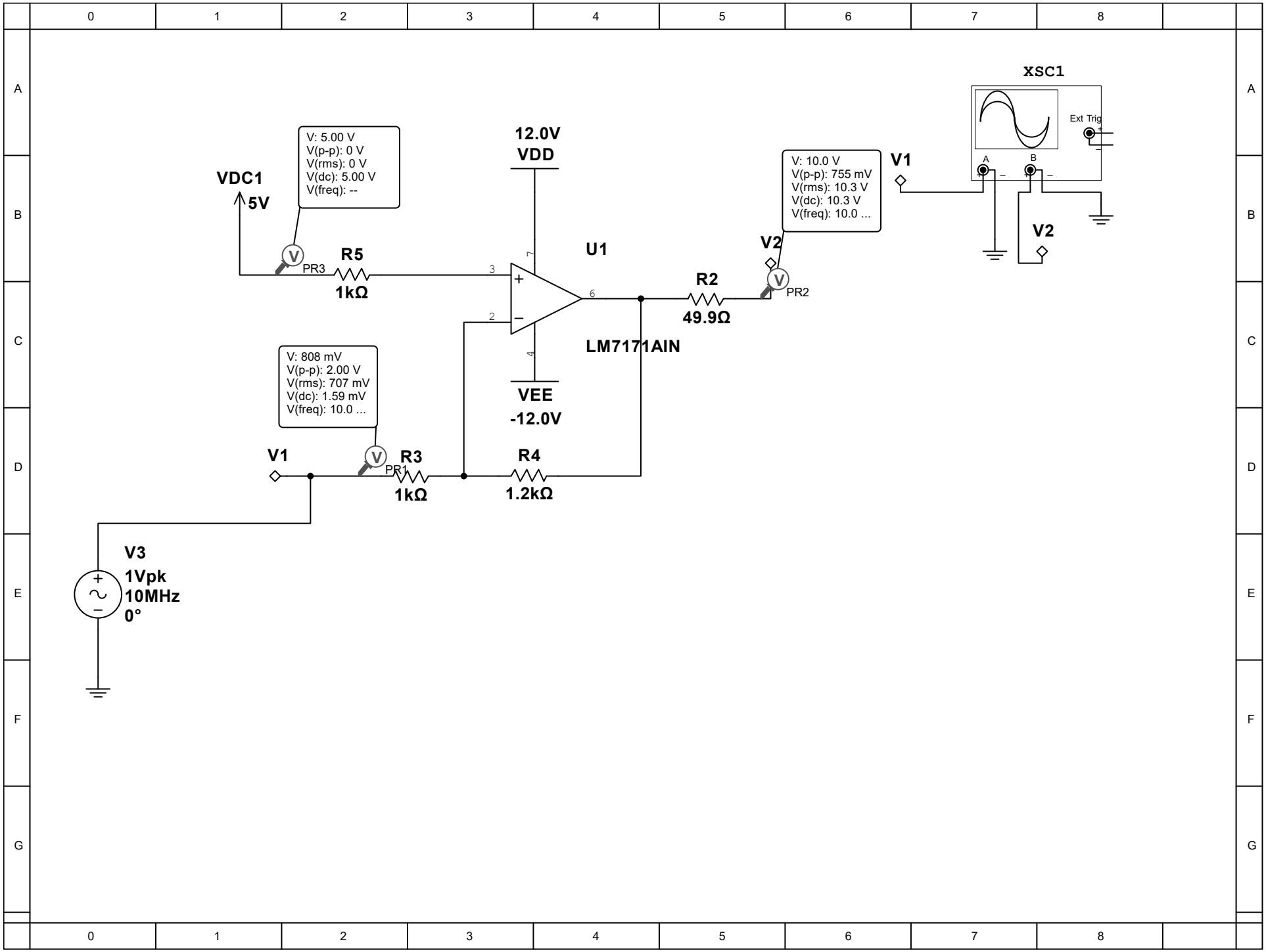
XSC1
Ext Trig
A
B
V1
V2
12.0V
VDD
VDC1
5V
V: 5.00 V
V(p-p): 0 V
V(rms): 0 V
V(dc): 5.00 V
V(freq): --
PR3
R5
1kΩ
U1
LM7171AIN
VEE
-12.0V
V: 10.0 V
V(p-p): 755 mV
V(rms): 10.3 V
V(dc): 10.3 V
V(freq): 10.0 ...
PR2
R2
49.9Ω
V: 808 mV
V(p-p): 2.00 V
V(rms): 707 mV
V(dc): 1.59 mV
V(freq): 10.0 ...
PR1
R3
1kΩ
R4
1.2kΩ
V3
1Vpk
10MHz
0°