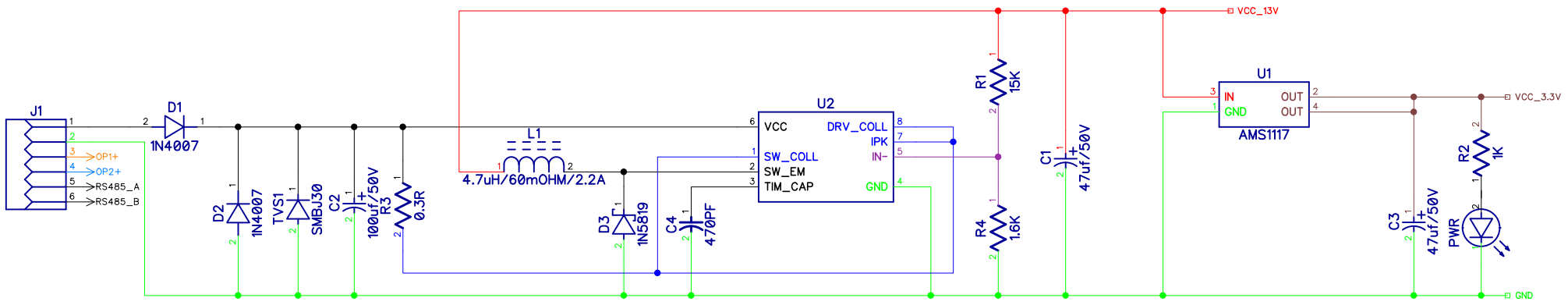
J1
OP1+
OP2+
RS485_A
RS485_B
D1
1N4007
D2
1N4007
TVS1
SMBJ30
C2
100uf/50V
R3
0.3R
L1
4.7uH/60mOHM/2.2A
D3
1N5819
C4
470PF
U2
VCC
SW_COLL
SW_EM
TIM_CAP
DRV_COLL
IPK
IN-
GND
R1
15K
R4
1.6K
C1
47uf/50V
VCC_13V
U1
IN
GND
OUT
OUT
AMS1117
VCC_3.3V
C3
47uf/50V
R2
1K
PWR
GND

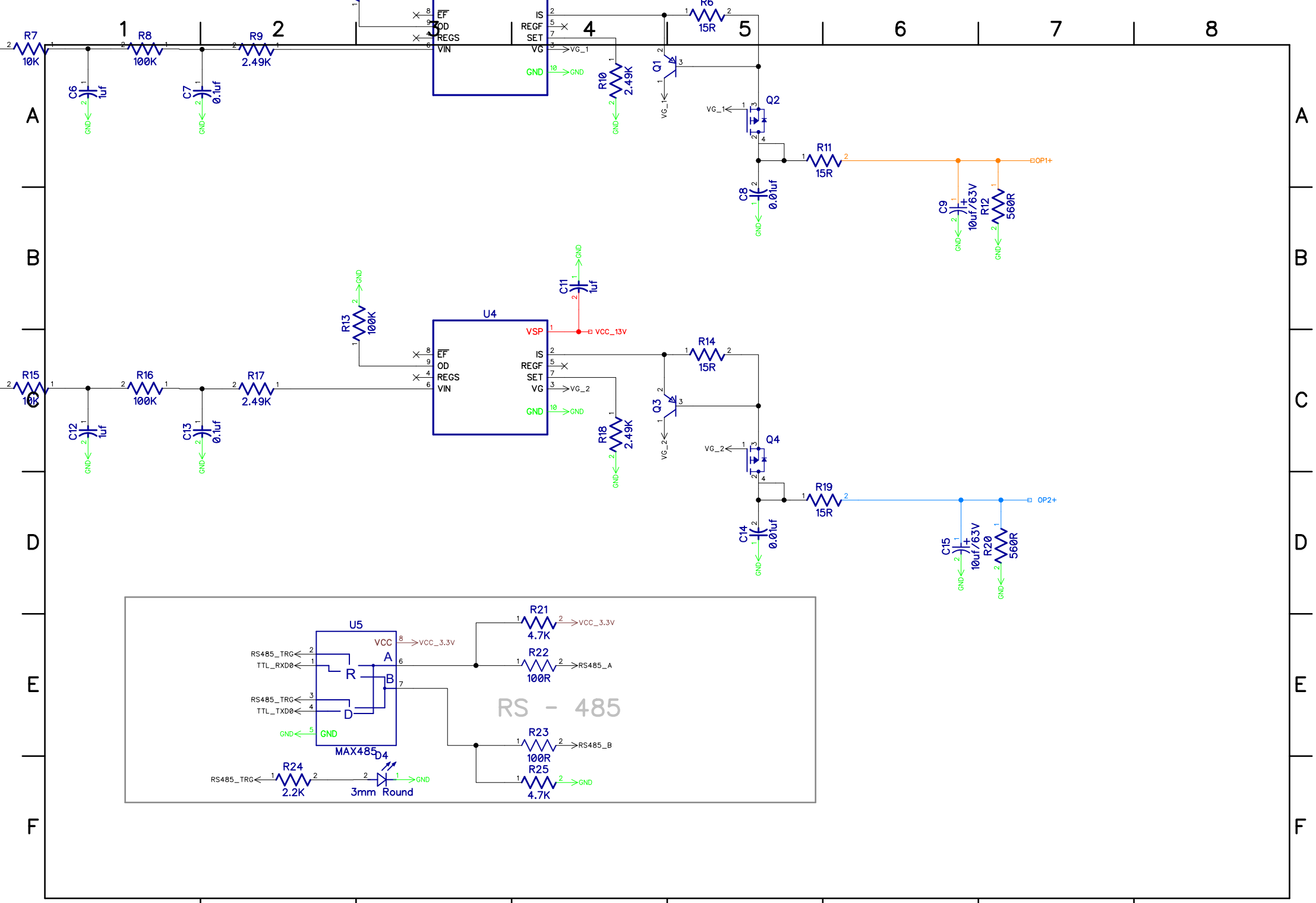
R7
10K
R8
100K
R9
2.49K
C6
1uf
C7
0.1uf
EF
OD
REGS
VIN
IS
REGF
SET
VG
GND
VG_1
R10
2.49K
R6
15R
Q1
Q2
R11
15R
OP1+
C8
0.01uf
C9
10uf/63V
R12
560R
C11
1uf
VCC_13V
U4
VSP
R13
100K
R15
100K
R16
100K
R17
2.49K
C12
1uf
C13
0.1uf
VG_2
R18
2.49K
R14
15R
Q3
Q4
R19
15R
OP2+
C14
0.01uf
C15
10uf/63V
R20
560R
U5
VCC_3.3V
RS485_TRG
TTL_RXD0
TTL_TXD0
R
D
A
B
MAX485
R21
4.7K
R22
100R
RS485_A
RS485_B
R23
100R
R24
2.2K
D4
3mm Round
R25
4.7K
RS - 485

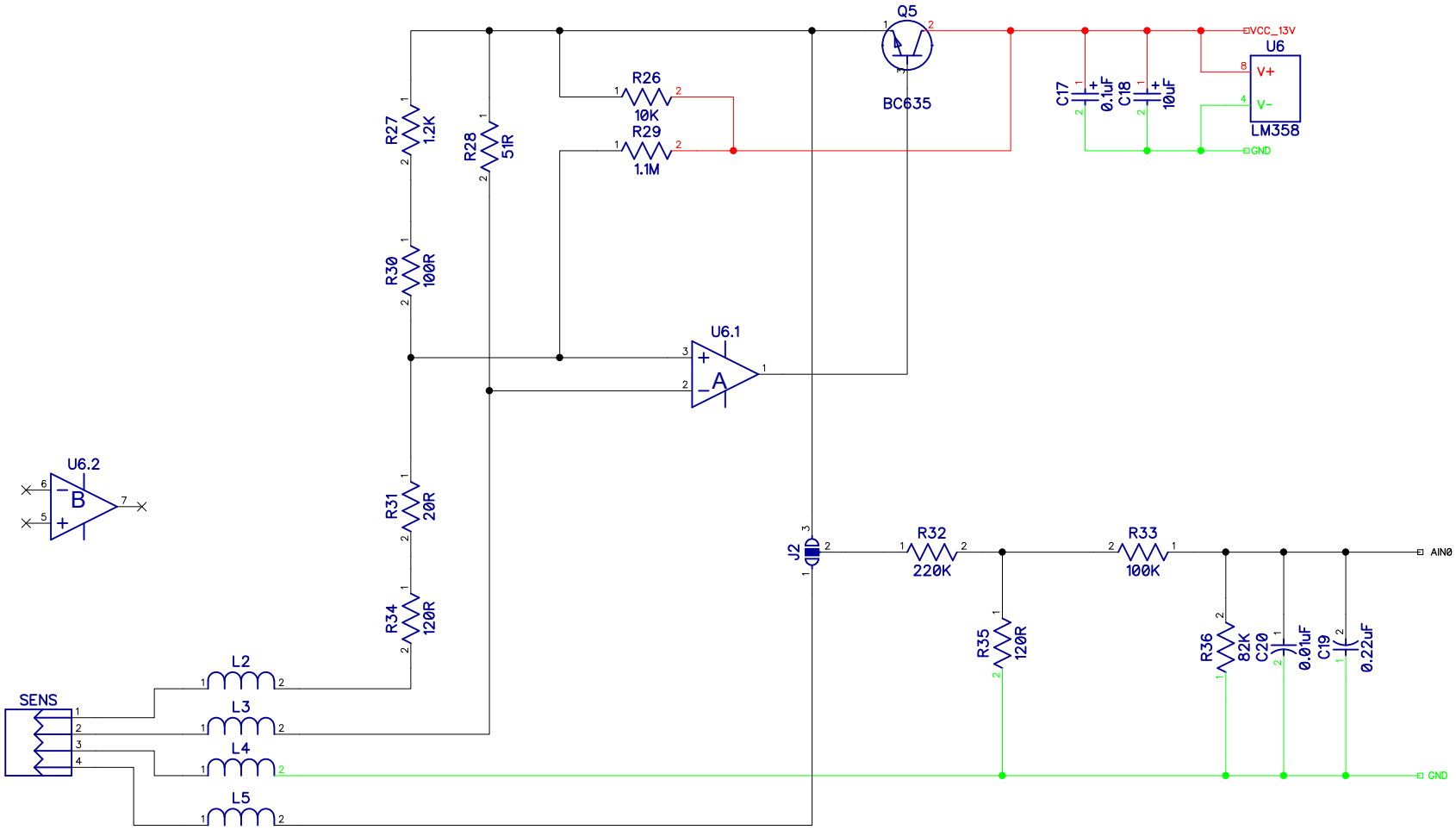
Q5
BC635
R26
10K
R29
1.1M
R27
1.2K
R28
51R
R30
100R
R31
20R
R34
120R
U6.1
U6.2
VCC_13V
U6
V+
V-
LM358
GND
C17
0.1uF
C18
10uF
J2
R32
220K
R33
100K
R35
120R
R36
82K
C20
0.01uF
C19
0.22uF
AIN0
GND
SENS
L2
L3
L4
L5

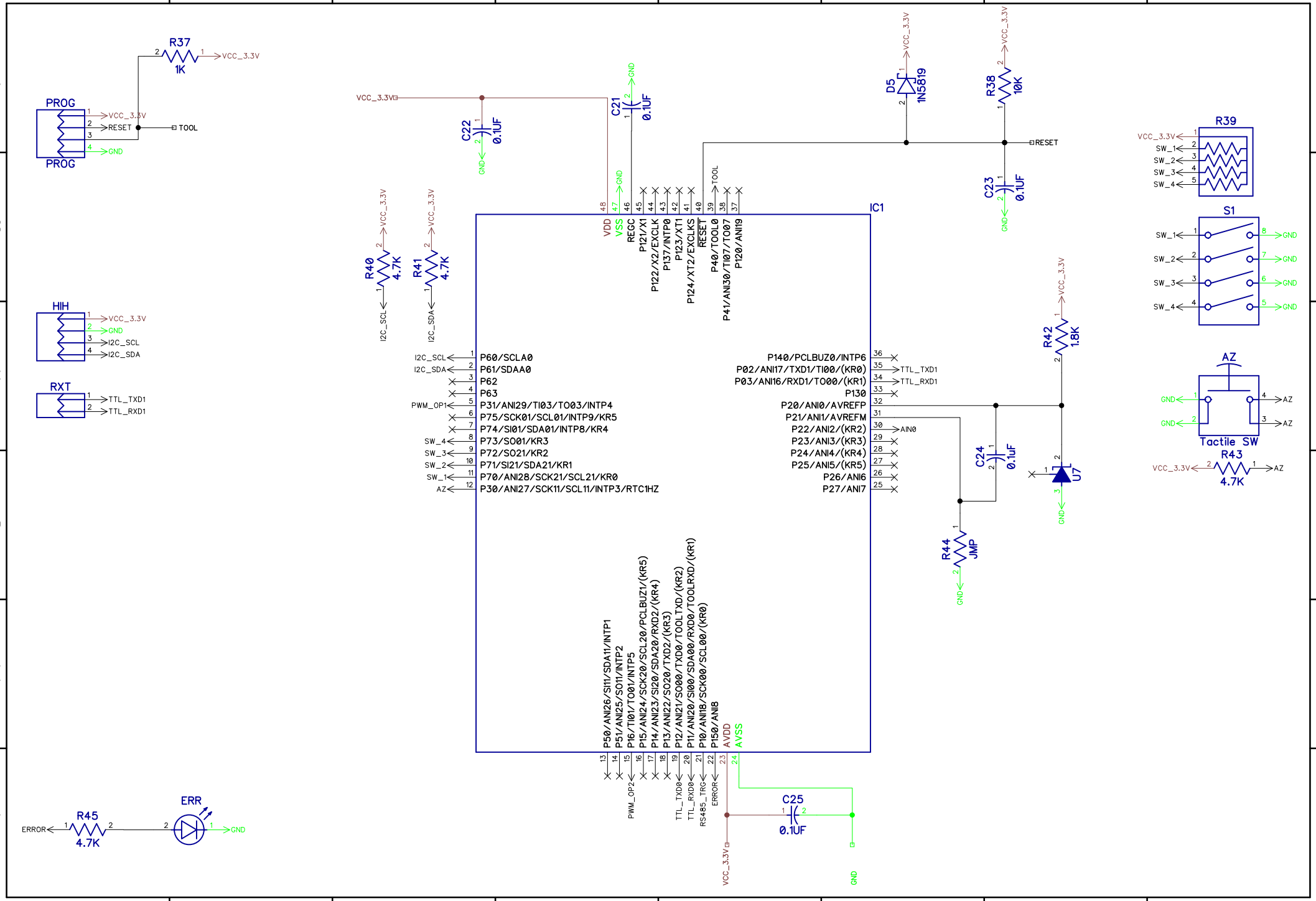
PROG
R37
1K
VCC_3.3V
RESET
TOOL
GND
HIH
I2C_SCL
I2C_SDA
RXT
TTL_TXD1
TTL_RXD1
R40
4.7K
R41
4.7K
C22
0.1UF
C21
0.1UF
D5
1N5819
R38
10K
C23
0.1UF
R39
SW_1
SW_2
SW_3
SW_4
S1
IC1
VDD
VSS
REGC
P121/X1
P122/X2/EXCLK
P137/INTP0
P123/XT1
P124/XT2/EXCLKS
RESET
P40/TOOL0
P41/ANI30/TI07/TO07
P120/ANI19
P60/SCLA0
P61/SDAA0
P62
P63
PWM_OP1
P31/ANI29/TI03/TO03/INTP4
P75/SCK01/SCL01/INTP9/KR5
P74/SI01/SDA01/INTP8/KR4
P73/SO01/KR3
P72/SO21/KR2
P71/SI21/SDA21/KR1
P70/ANI28/SCK21/SCL21/KR0
P30/ANI27/SCK11/SCL11/INTP3/RTC1HZ
P140/PCLBUZ0/INTP6
P02/ANI17/TXD1/TI00/(KR0)
P03/ANI16/RXD1/TO00/(KR1)
P130
P20/ANI0/AVREFP
P21/ANI1/AVREFM
P22/ANI2/(KR2)
P23/ANI3/(KR3)
P24/ANI4/(KR4)
P25/ANI5/(KR5)
P26/ANI6
P27/ANI7
AIN0
P50/ANI26/SI11/SDA11/INTP1
P51/ANI25/SO11/INTP2
P16/TI01/TO01/INTP5
P15/ANI24/SCK20/SCL20/PCLBUZ1/(KR5)
P14/ANI23/SI20/SDA20/RXD2/(KR4)
P13/ANI22/SO20/TXD2/(KR3)
P12/ANI21/SO00/TXD0/TOOLTXD/(KR2)
P11/ANI20/SI00/SDA00/RXD0/TOOLRXD/(KR1)
P10/ANI18/SCK00/SCL00/(KR0)
P150/ANI8
AVDD
AVSS
PWM_OP2
TTL_TXD0
TTL_RXD0
RS485_TRG
ERROR
C25
0.1UF
R42
1.8K
C24
0.1uF
U7
R44
JMP
AZ
Tactile SW
R43
4.7K
R45
4.7K
ERR