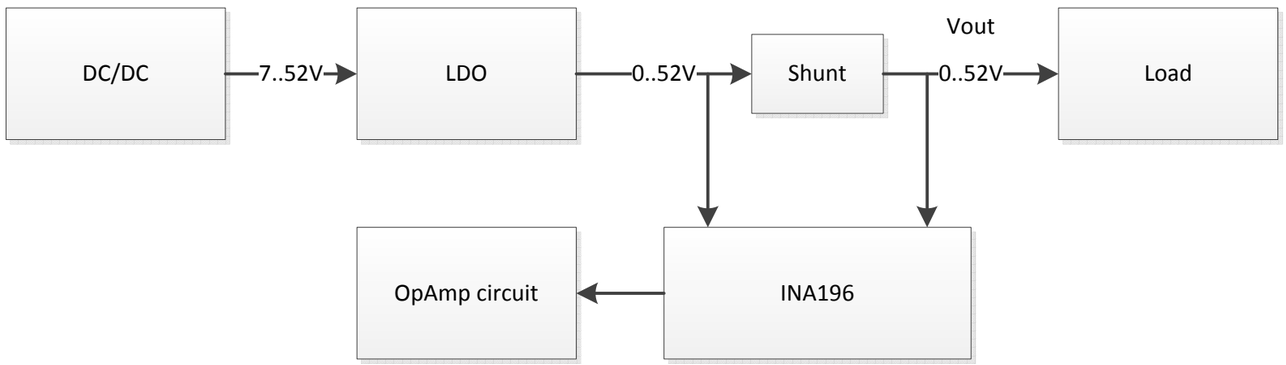
DC/DC
7..52V
LDO
0..52V
Shunt
Vout
0..52V
Load
OpAmp circuit
INA196