12V -> 3.3V

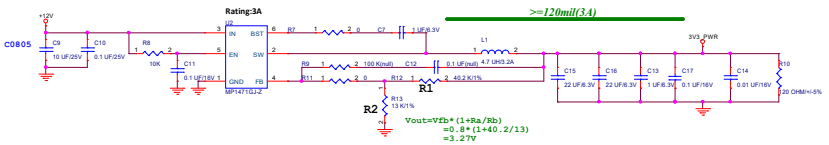

MPS1471_3.3V simulation: R1=115K/Rb=37.4k

Hardware Monitor

Hardware Monitor

LAYOUT:
C1175 close to Q1008

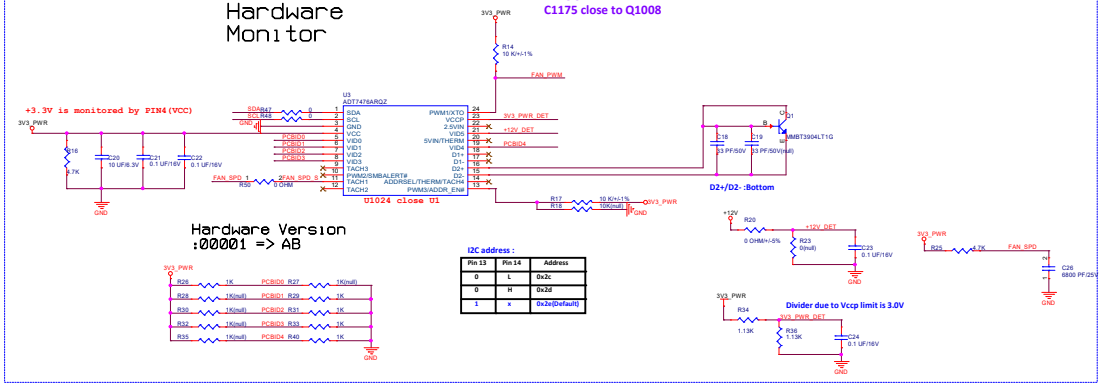

Pin 13	Pin 14	Address
0	L	0x2c
0	H	0x2d
1	x	0x2e(Default)

CURRENT MONITOR

CURRENT MONITOR (0x40)

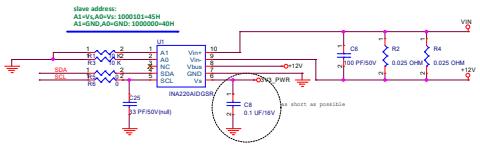

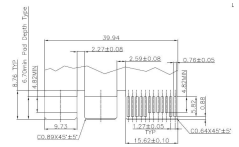

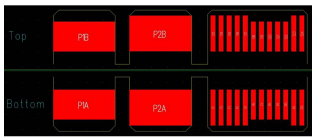

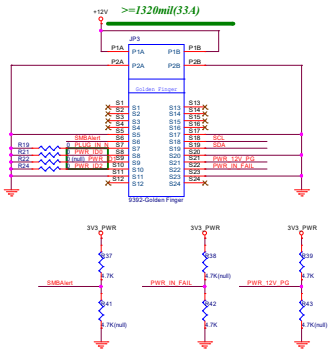

Need mother board pull up

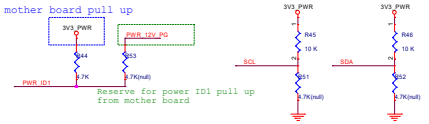

Power pin 60 A
signal pin 1A

POWER	PWR1_ID0	PWR1_ID1	PWR1_ID2
DC POWER	0	0	-
AC POWER	0	1	-

P1A,P1B	5.82 mm	POWER
P2A,P2B	6.7 mm	GND
S1,S13	5.82 mm	
S2,S14	5.82 mm	
S3,S15	5.82 mm	
S4,S16	5.82 mm	
S5,S17	5.82 mm	
S6,S18	4.82 mm	
S7,S19	4.82 mm	
S8,S20	4.82 mm	
S9,S21	4.82 mm	
S10,S22	4.82 mm	
S11,S23	5.82 mm	
S12,S24	5.82 mm	