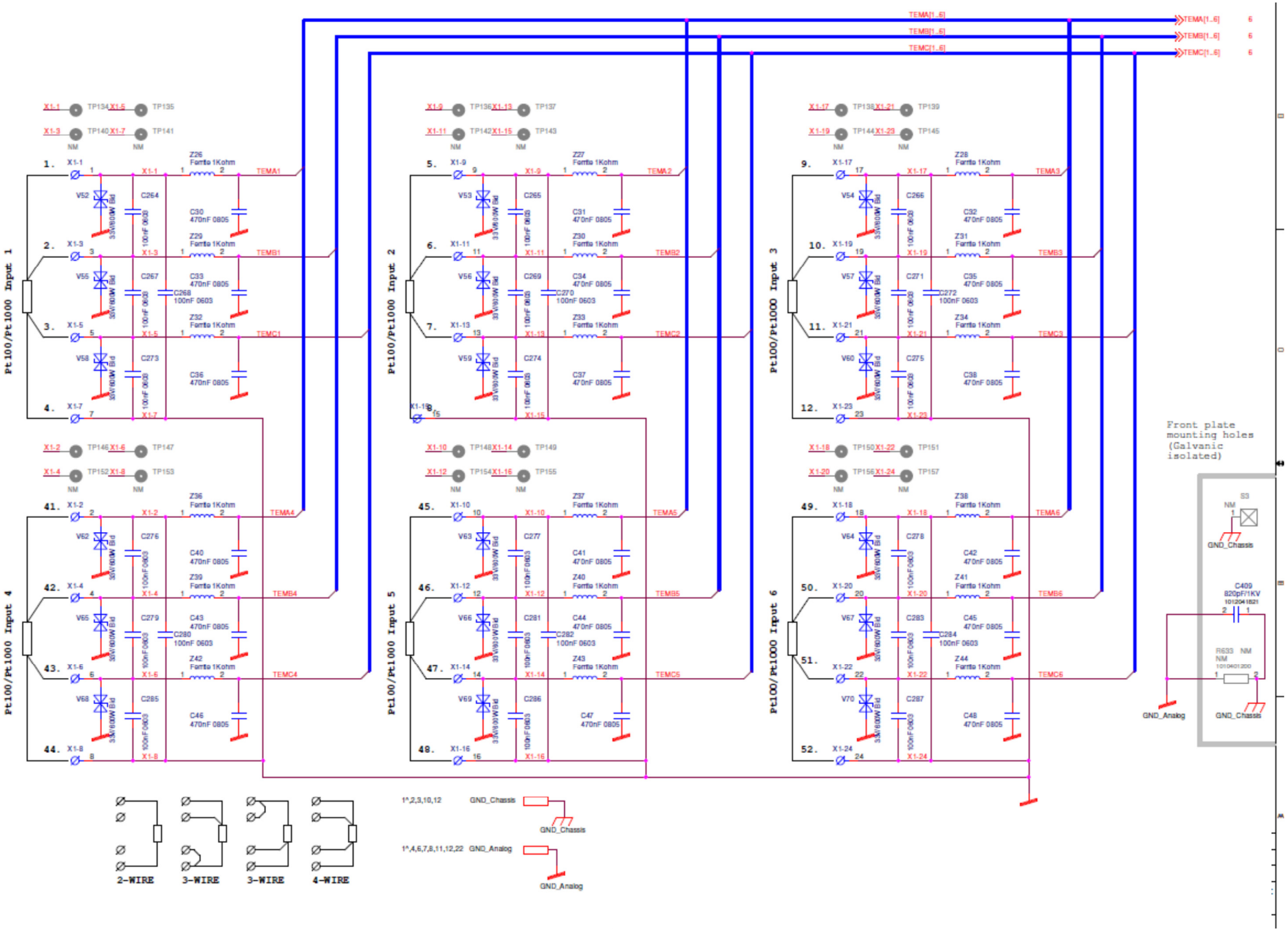
Pt100/Pt1000 Input 1
Pt100/Pt1000 Input 2
Pt100/Pt1000 Input 3
Pt100/Pt1000 Input 4
Pt100/Pt1000 Input 5
Pt100/Pt1000 Input 6
TEMA[1..6]
TEMB[1..6]
TEMC[1..6]
Front plate mounting holes (Galvanic isolated)
GND_Chassis
GND_Analog
C409 820pF/1KV
R633 NM
2-WIRE
3-WIRE
3-WIRE
4-WIRE
1^,2,3,10,12 GND_Chassis
1^,4,6,7,8,11,12,22 GND_Analog

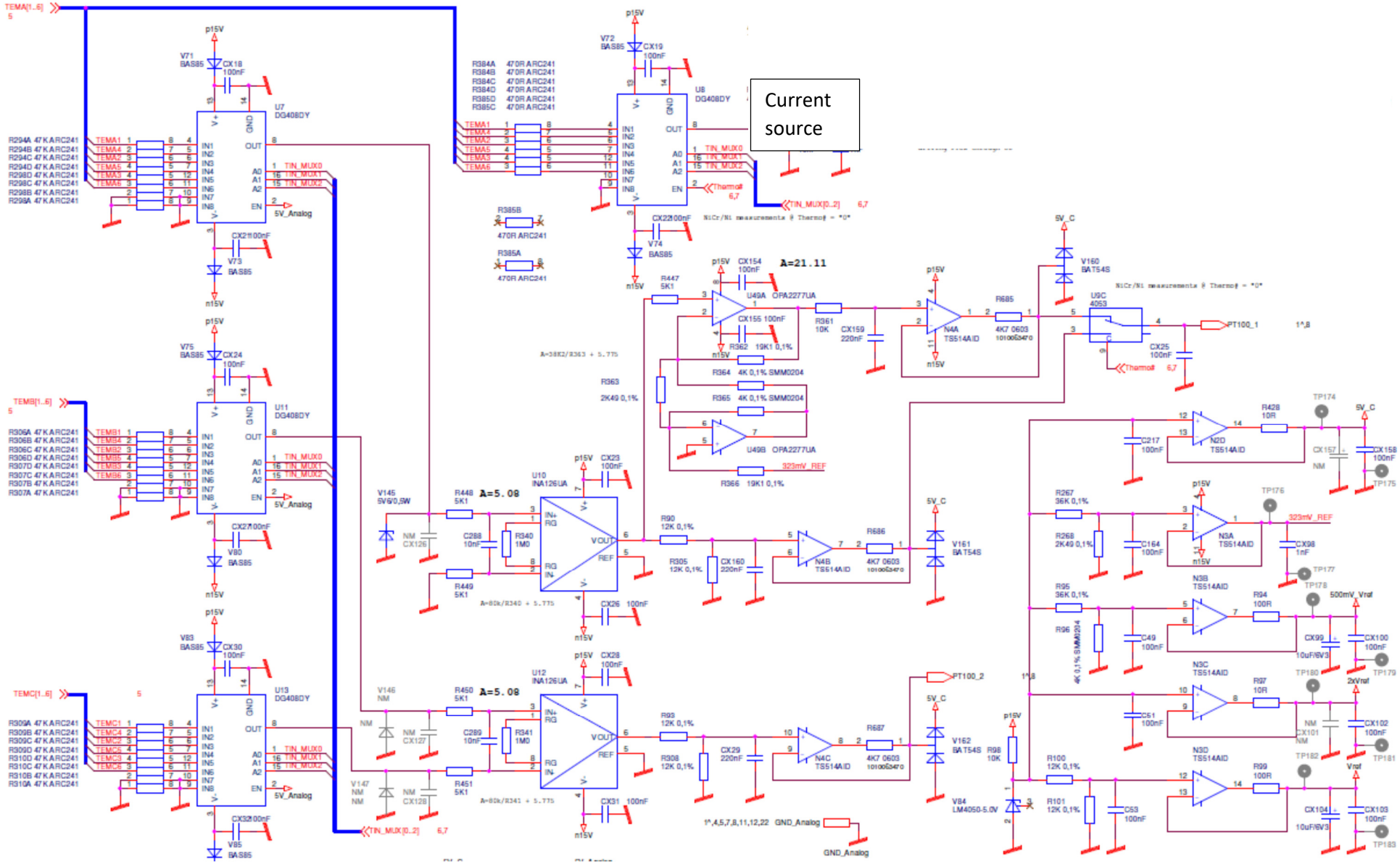
Current source
A=21.11
A=5.08
A=5.08
U7 DG408DY
U8 DG408DY
U11 DG408DY
U13 DG408DY
U10 INA126UA
U12 INA126UA
U49A OPA2277UA
U49B OPA2277UA
N4A TS514AID
N4B TS514AID
N4C TS514AID
N2D TS514AID
N3A TS514AID
N3B TS514AID
N3C TS514AID
N3D TS514AID
U9C 4053
V84 LM4050-5.0V
5V_Analog
GND_Analog
PT100_1
PT100_2
TIN_MUX[0..2]
Thermo#
323mV_REF
500mV_Vref
2xVref
Vref