CURRENT SHUNT MONITOR A.SchDoc

TÜM HAKLARI AKIM METAL SAN. VE TİC. A.Ş. AİTTİR SAKLIDIR KOPYALANAMAZ VE PAYLAŞILAMAZ

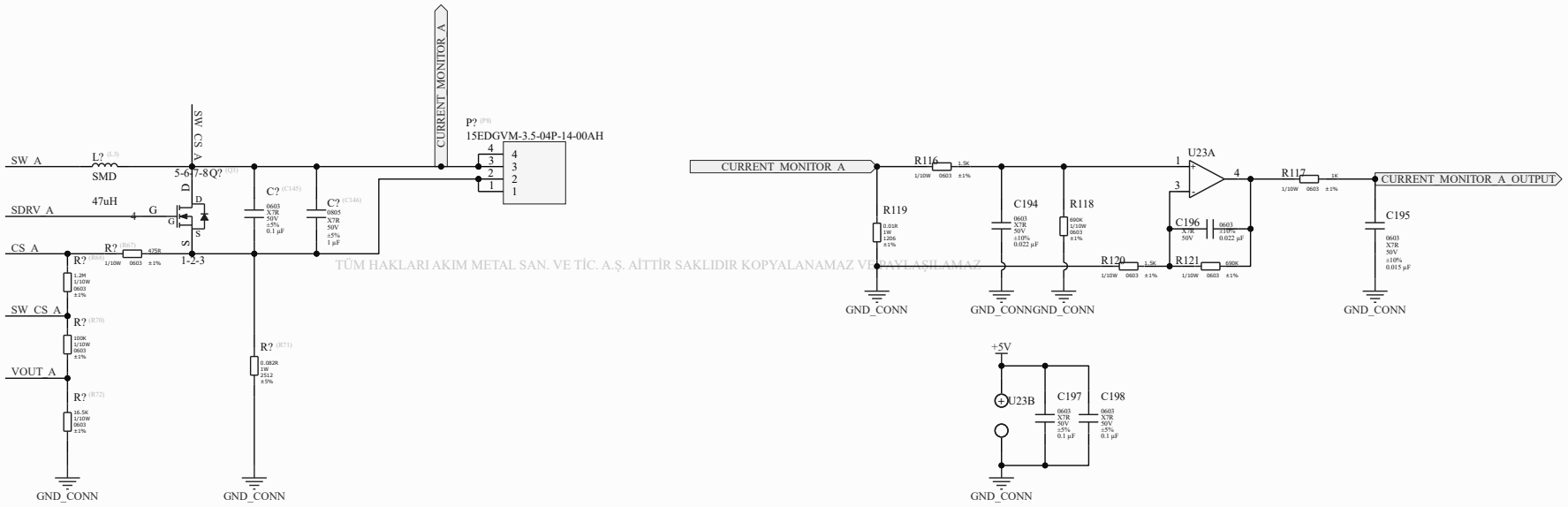

Project	**AKIM_METAL_SGSI.PrjPcb**	
Project Code	*	
Title:	*	
Drawn By	*	
Check By	*	
Approve By	*	
Date: *6.09.2024*	Revision *	Sheet: *20* of *27*

SMB Technics
Address: Istanbul Anadolu Yakası Organize Sanayi Bölgesi 2.Sanayi Cad. No:7 , 34953 Aydınlı/Tuzla/Istanbul
Website: https://www.smbtechnics.com/
Phone: +90 216 593 19 90