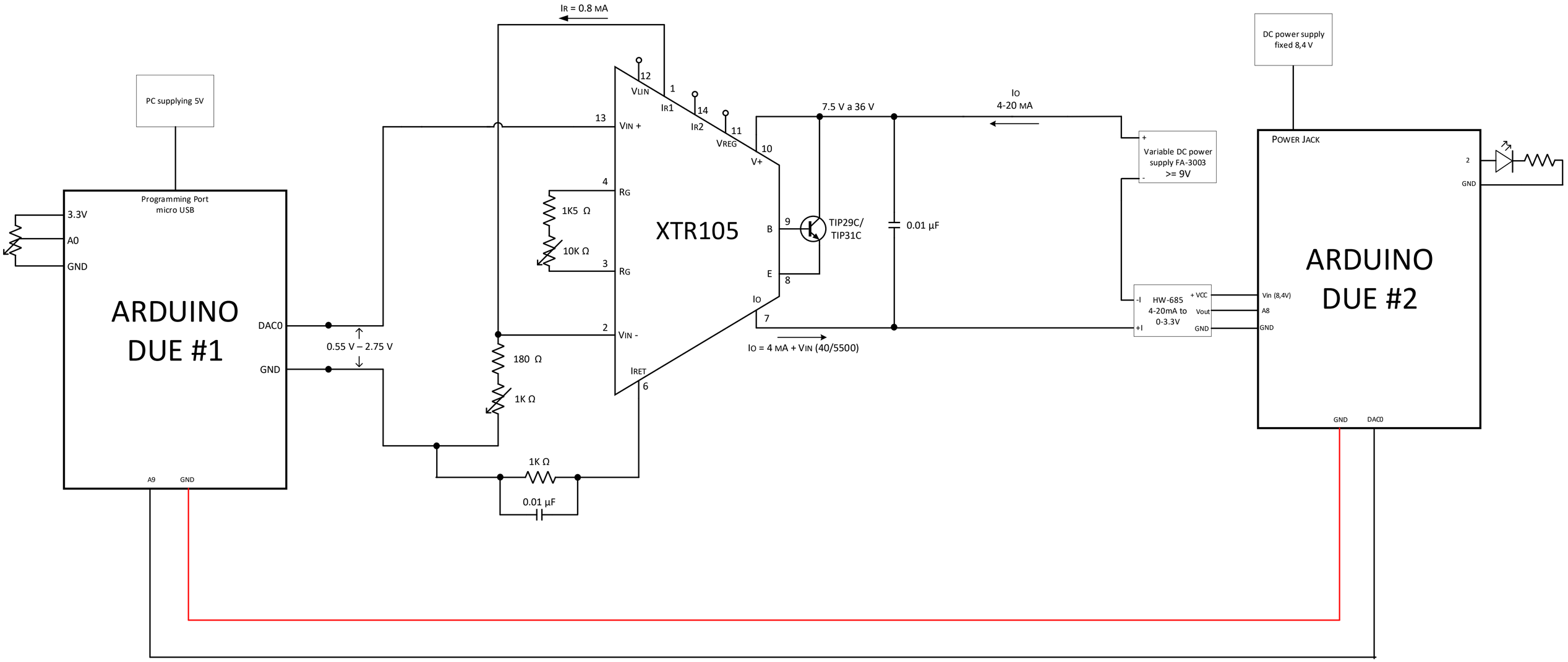
IR = 0.8 mA
PC supplying 5V
Programming Port
micro USB
3.3V
A0
GND
ARDUINO
DUE #1
DAC0
GND
A9
GND
0.55 V – 2.75 V
180 Ω
1K Ω
1K Ω
0.01 µF
1K5 Ω
10K Ω
12
VLIN
1
IR1
14
IR2
11
VREG
13
VIN +
4
RG
3
RG
2
VIN -
IRET
6
XTR105
10
V+
9
B
E
8
IO
7
TIP29C/
TIP31C
0.01 µF
7.5 V a 36 V
IO = 4 mA + VIN (40/5500)
IO
4-20 mA
+
Variable DC power
supply FA-3003
>= 9V
-
-I
HW-685
4-20mA to
0-3.3V
+I
+ VCC
Vout
GND
DC power supply
fixed 8,4 V
POWER JACK
2
GND
ARDUINO
DUE #2
Vin (8,4V)
A8
GND
GND
DAC0