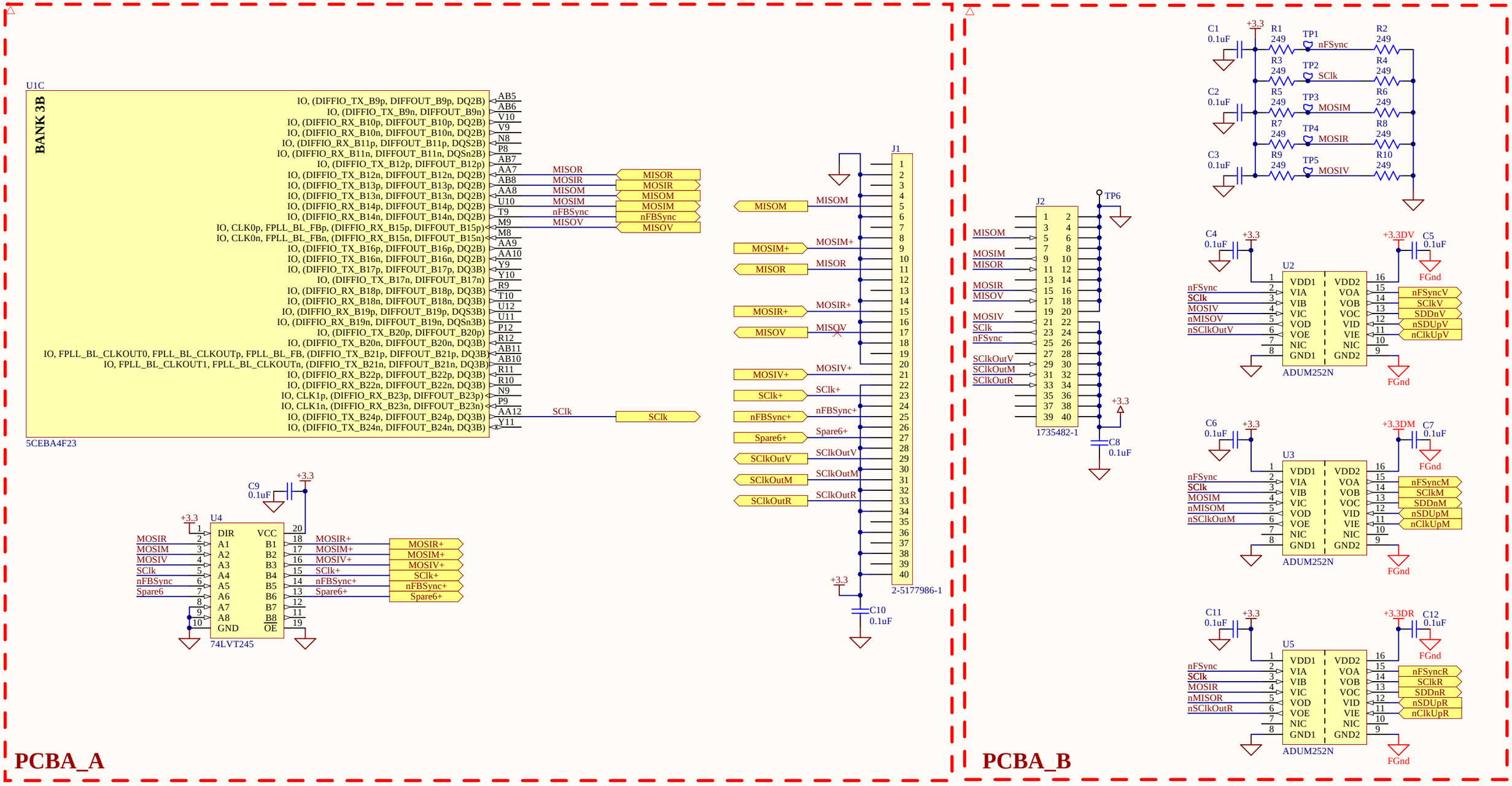

CONFIDENTIAL & PROPRIETARY - APPLIED MEDICAL

THIS DOCUMENT CONTAINS CONFIDENTIAL AND PRORIETARY INFORMATION OF APPLIED MEDICAL AND SHALL NOT BE REPRODUCED, DISCLOSED, OR USED IN THE MANUFACTURE, USE OR SALE OF ANY ITEM WITHOUT THE PRIOR WRITTEN PERMISSION OF APPLIED MEDICAL INC.

TITLE: b

FILENAME: Buffer_Overview_Schematic.SchDoc

MATERIAL:

SIZE: B

DRAWING NO.

SVN REV.: Not in ver

SHEET: * OF *