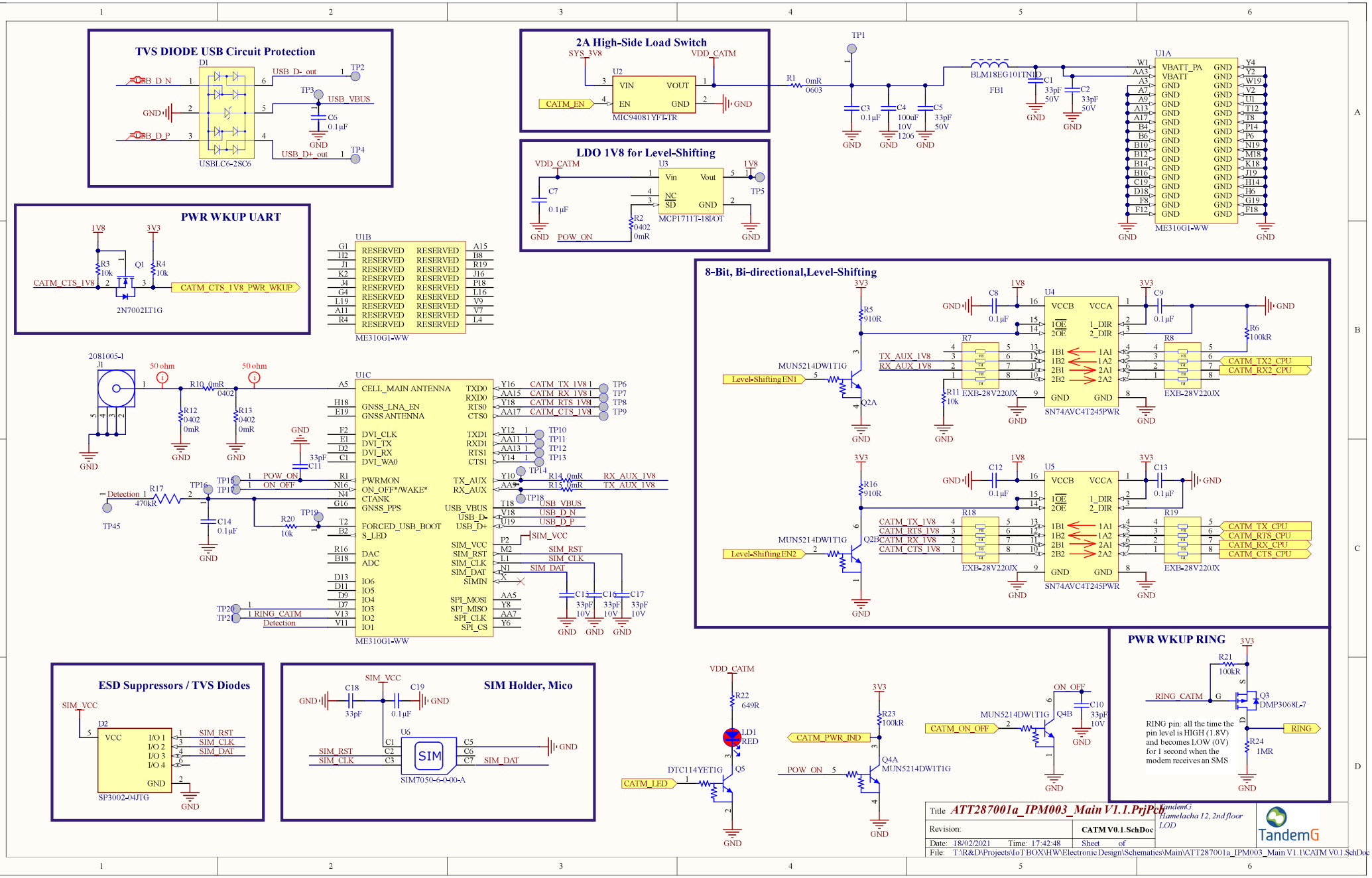
TVS DIODE USB Circuit Protection
USBLC6-2SC6
2A High-Side Load Switch
MIC94081YFT-TR
LDO 1V8 for Level-Shifting
MCP1711T-18I/OT
PWR WKUP UART
2N7002LT1G
ME310G1-WW
8-Bit, Bi-directional,Level-Shifting
SN74AVC4T245PWR
EXB-28V220JX
ESD Suppressors / TVS Diodes
SP3002-04JTG
SIM Holder, Mico
SIM7050-6-0-00-A
PWR WKUP RING
RING pin: all the time the pin level is HIGH (1.8V) and becomes LOW (0V) for 1 second when the modem receives an SMS
Title ATT287001a_IPM003_Main V1.1.PrjPcb
Revision:
CATM V0.1.SchDoc
Date: 18/02/2021 Time: 17:42:48
Sheet of
File: T:\R&D\Projects\IoT BOX\HW\Electronic Design\Schematics\Main\ATT287001a_IPM003_Main V1.1\CATM V0.1.SchDoc
TandemG
Hamelacha 12, 2nd floor
LOD