CHEMICAL FLOW SENSOR 1

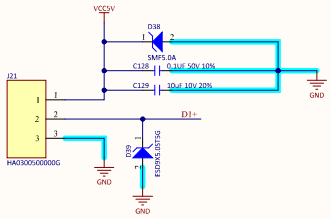

CHEMICAL FLOW SENSOR 2

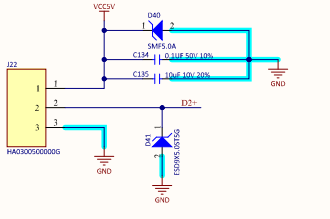

CHEMICAL FLOW SENSOR 3

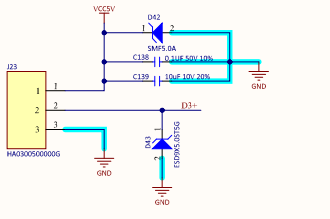

WATER FLOW SENSOR 3

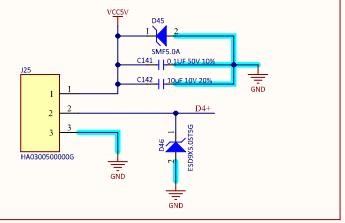

DIGITAL INPUTS

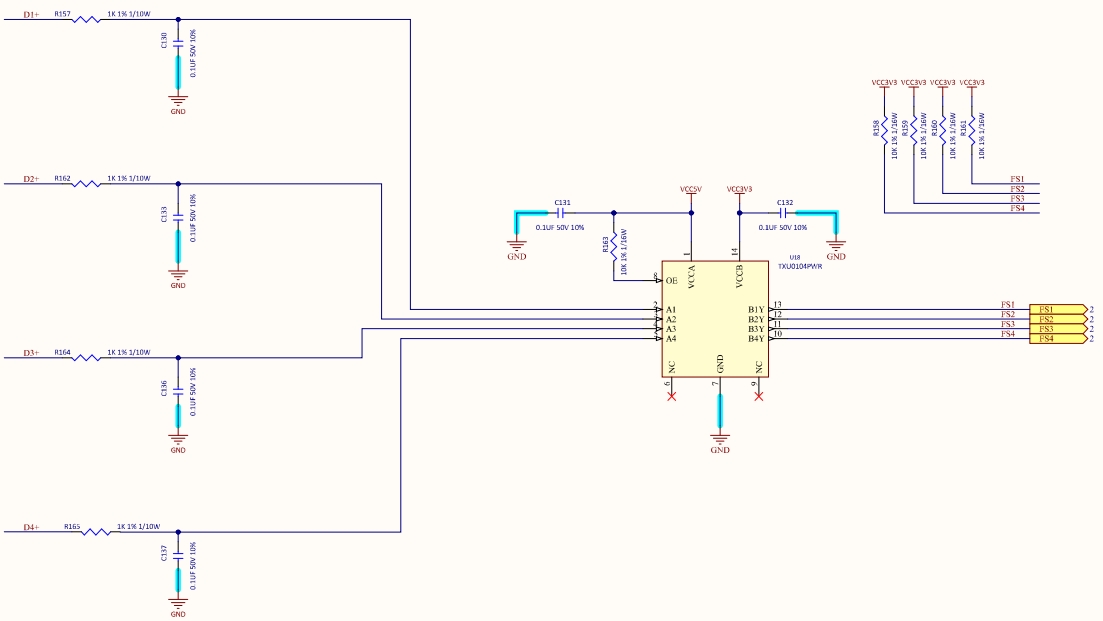

DOOR SENSE SWITCH

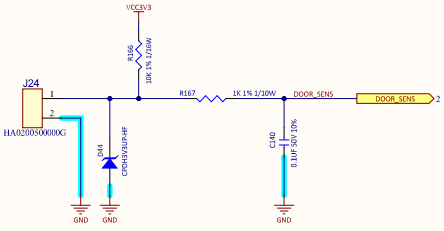

NOTES: