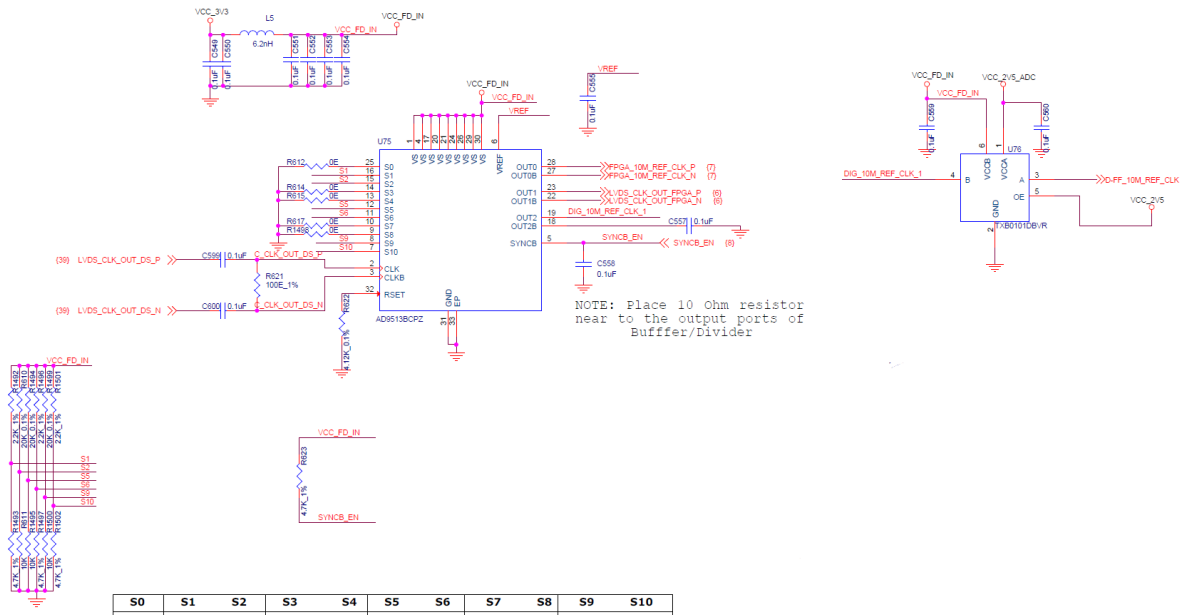
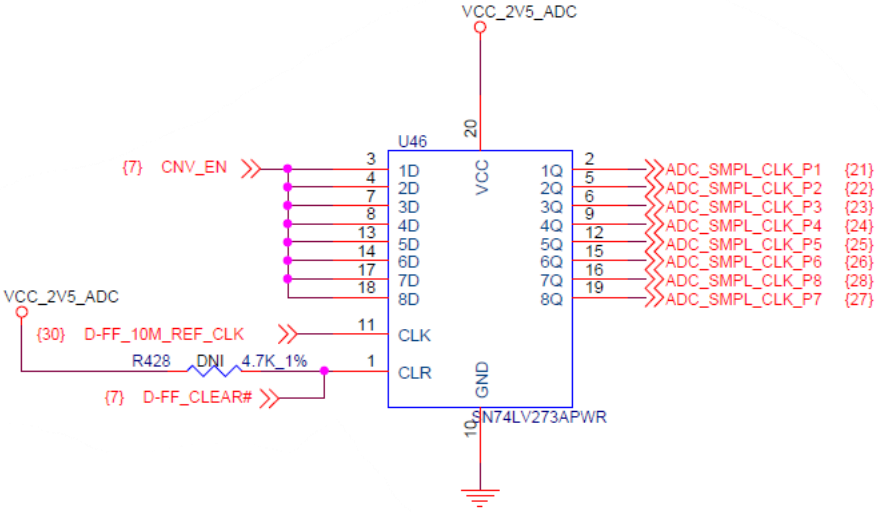
S0	S1	S2	S3	S4	S5	S6	S7	S8	S9	S10
0	2/3	1/3	0	0	1/3	2/3	0	0	1/3	2/3
All O/P's ON	LVDS, LVDS, CMOS		OUT2- DELAY=0 PHASE=0		OUT2- DIVIDE=12		OUT1- DELAY=0 PHASE=1		OUT0- DIVIDE=12