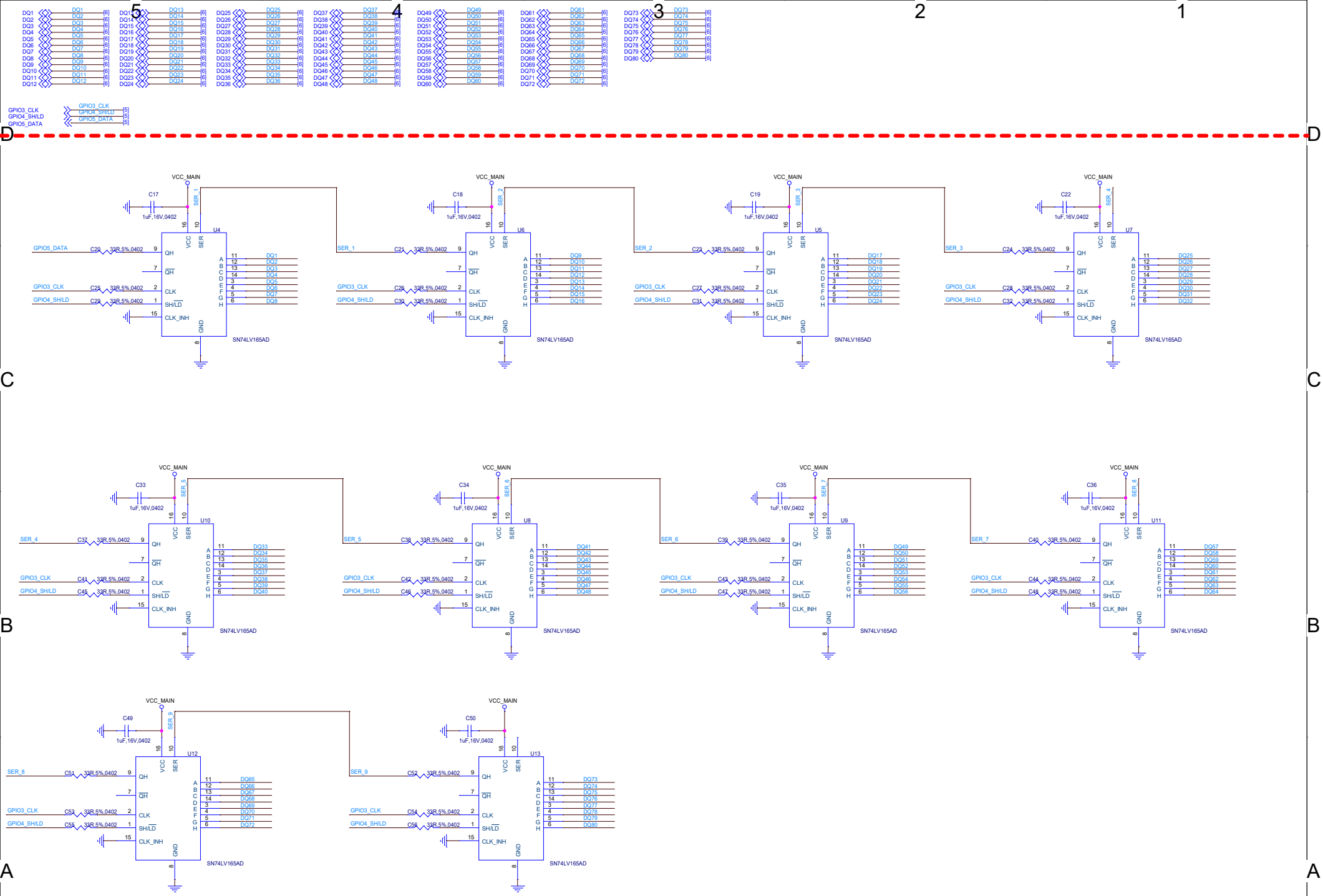

ALLYSTAR TECHNOLOGY

Title: <Title>

Size	Document Number	Rev
C		V1.0

Date: Thursday, March 31, 2022 Sheet 4 of 6