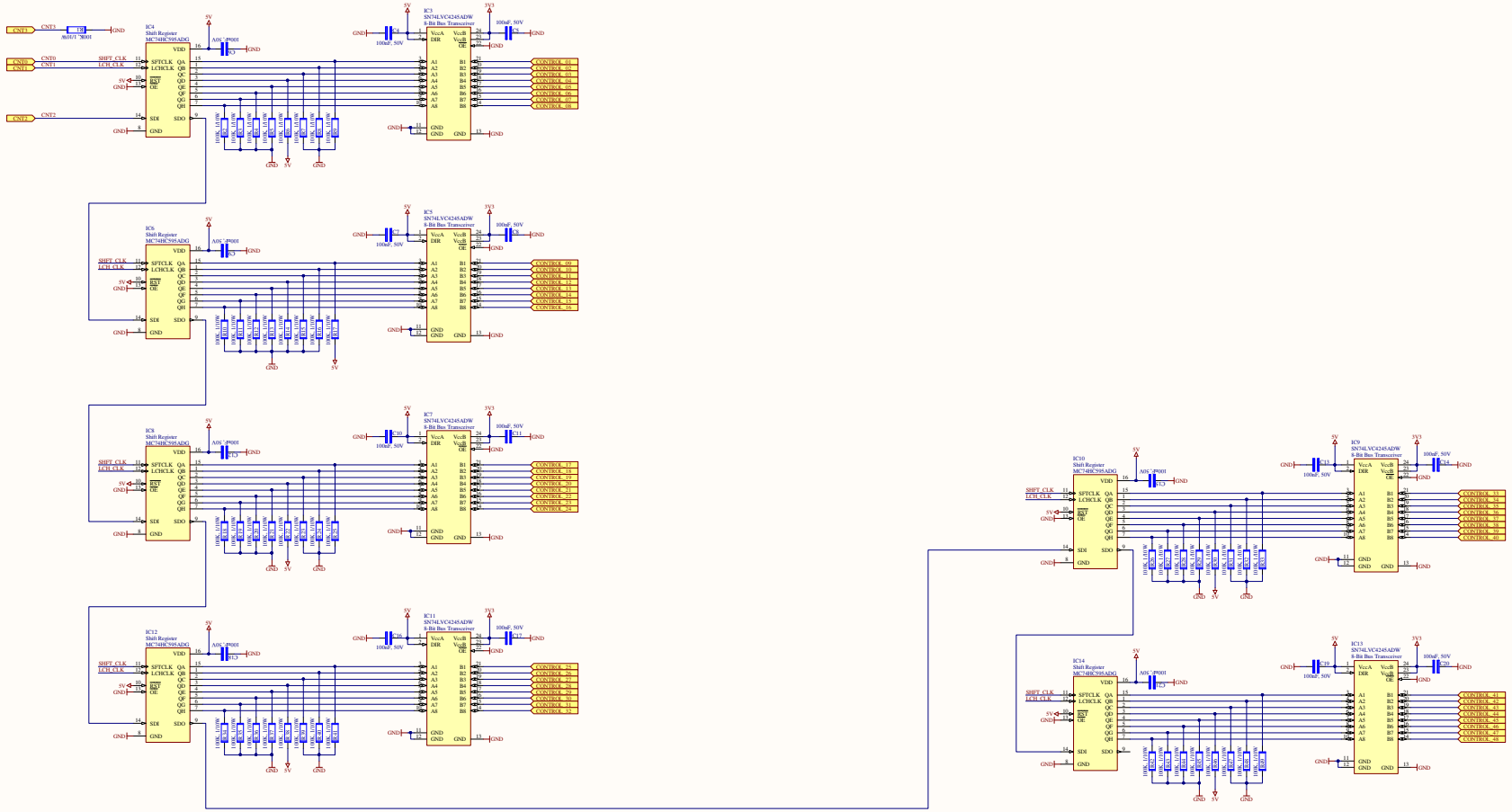
CNT3
CNT0
CNT1
CNT2
SHIFT_CLK
LCH_CLK
IC4
IC6
IC8
IC12
Shift Register
MC74HC595ADG
IC3
IC5
IC7
IC11
SN74LVC4245ADW
8-Bit Bus Transceiver
IC10
IC14
IC9
IC13
CONTROL_01
CONTROL_02
CONTROL_03
CONTROL_04
CONTROL_05
CONTROL_06
CONTROL_07
CONTROL_08
CONTROL_09
CONTROL_10
CONTROL_11
CONTROL_12
CONTROL_13
CONTROL_14
CONTROL_15
CONTROL_16
CONTROL_17
CONTROL_18
CONTROL_19
CONTROL_20
CONTROL_21
CONTROL_22
CONTROL_23
CONTROL_24
CONTROL_25
CONTROL_26
CONTROL_27
CONTROL_28
CONTROL_29
CONTROL_30
CONTROL_31
CONTROL_32
CONTROL_33
CONTROL_34
CONTROL_35
CONTROL_36
CONTROL_37
CONTROL_38
CONTROL_39
CONTROL_40
CONTROL_41
CONTROL_42
CONTROL_43
CONTROL_44
CONTROL_45
CONTROL_46
CONTROL_47
CONTROL_48
100uF, 50V
GND
5V
3V3