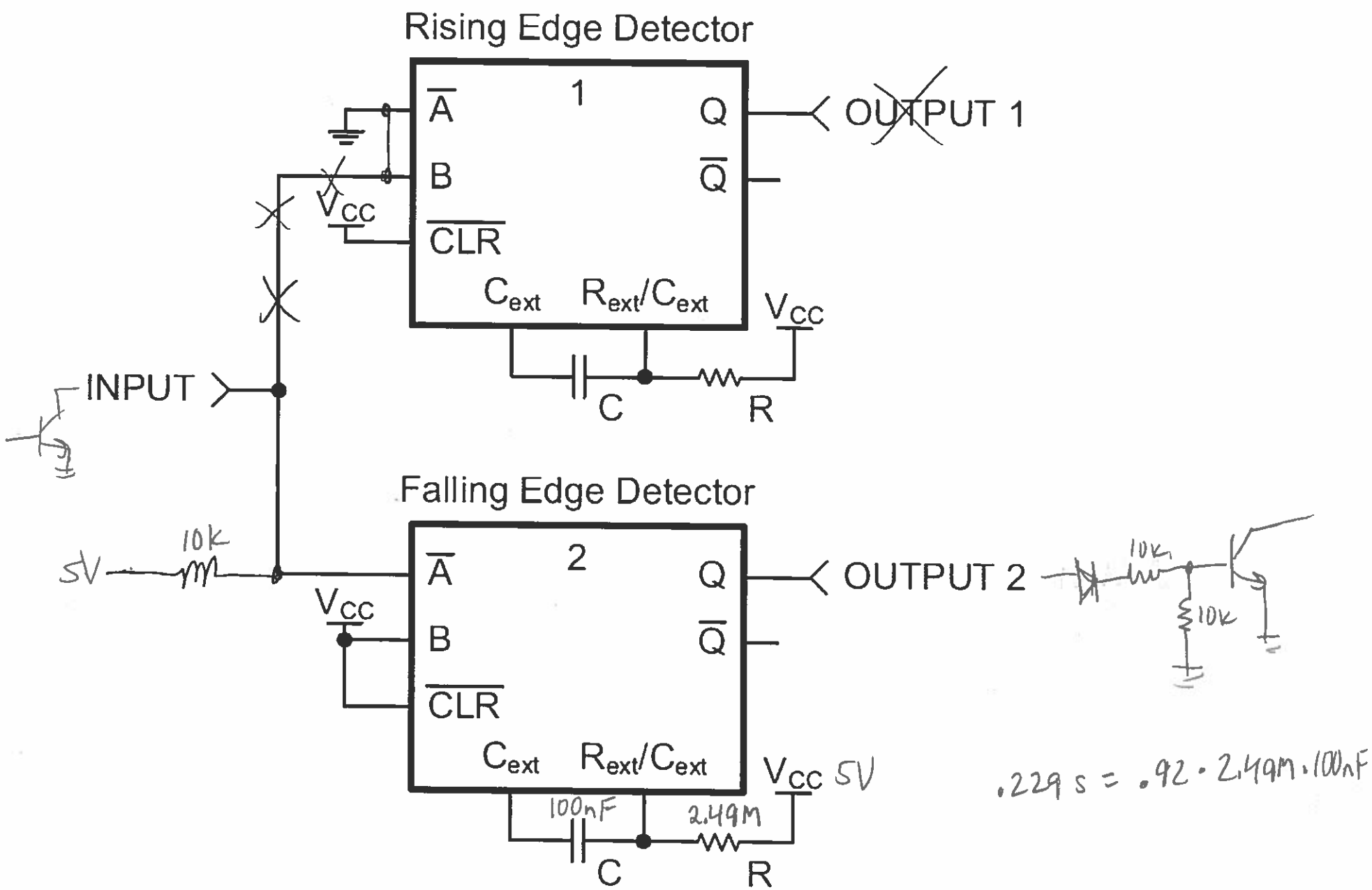

Figure 11. Simplified Application Schematic