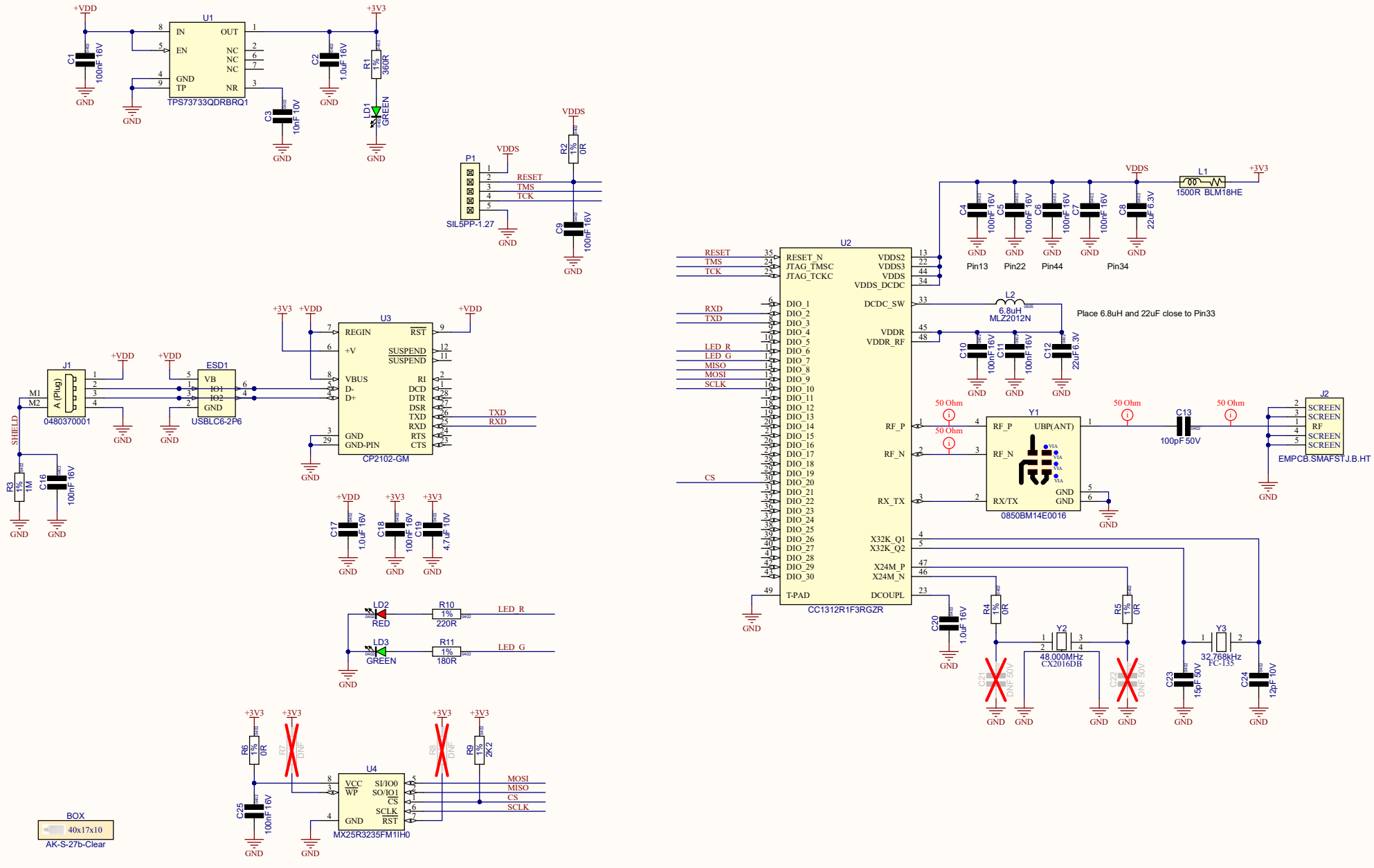
U1
TPS73733QDRBRQ1
IN
OUT
EN
NC
GND
TP
NR
+VDD
+3V3
C1 100nF 16V
C2 1.0uF 16V
C3 10nF 10V
R1 1% 360R
LD1 GREEN
P1
SIL5PP-1.27
VDDS
RESET
TMS
TCK
R2 1% 0R
C9 100nF 16V
U2
CC1312R1F3RGZR
RESET_N
JTAG_TMSC
JTAG_TCKC
DIO_1
DIO_2
DIO_3
DIO_4
DIO_5
DIO_6
DIO_7
DIO_8
DIO_9
DIO_10
DIO_11
DIO_12
DIO_13
DIO_14
DIO_15
DIO_16
DIO_17
DIO_18
DIO_19
DIO_20
DIO_21
DIO_22
DIO_23
DIO_24
DIO_25
DIO_26
DIO_27
DIO_28
DIO_29
DIO_30
T-PAD
VDDS2
VDDS3
VDDS
VDDS_DCDC
DCDC_SW
VDDR
VDDR_RF
RF_P
RF_N
RX_TX
X32K_Q1
X32K_Q2
X24M_P
X24M_N
DCOUPL
RXD
TXD
LED_R
LED_G
MISO
MOSI
SCLK
CS
L1 1500R BLM18HE
C4 100nF 16V
C5 100nF 16V
C6 100nF 16V
C7 100nF 16V
C8 22uF 6.3V
Pin13
Pin22
Pin44
Pin34
L2 6.8uH MLZ2012N
Place 6.8uH and 22uF close to Pin33
C10 100nF 16V
C11 100nF 16V
C12 22uF 6.3V
50 Ohm
Y1
0850BM14E0016
RF_P
UBP(ANT)
RF_N
RX/TX
GND
C13 100pF 50V
J2
EMPCB.SMAFSTJ.B.HT
SCREEN
RF
C20 1.0uF 16V
R4 1% 0R
R5 1% 0R
Y2
48.000MHz
CX2016DB
Y3
32.768kHz
FC-135
C21 DNF 50V
C22 DNF 50V
C23 15pF 50V
C24 12pF 10V
J1
A (Plug)
0480370001
M1
M2
SHIELD
ESD1
USBLC6-2P6
VB
IO1
IO2
R3 1% 1M
C16 100nF 16V
U3
CP2102-GM
REGIN
+V
VBUS
D-
D+
GND
GND-PIN
RST
SUSPEND
RI
DCD
DTR
DSR
TXD
RXD
RTS
CTS
C17 1.0uF 16V
C18 100nF 16V
C19 4.7uF 10V
LD2 RED
R10 1% 220R
LED_R
LD3 GREEN
R11 1% 180R
LED_G
U4
MX25R3235FM1IH0
VCC
WP
SI/IO0
SO/IO1
CS
SCLK
RST
R6 1% 0R
R7 DNF
R8 DNF
R9 1% 2K2
C25 100nF 16V
MOSI
MISO
CS
SCLK
BOX
40x17x10
AK-S-27b-Clear
GND

NOTES: