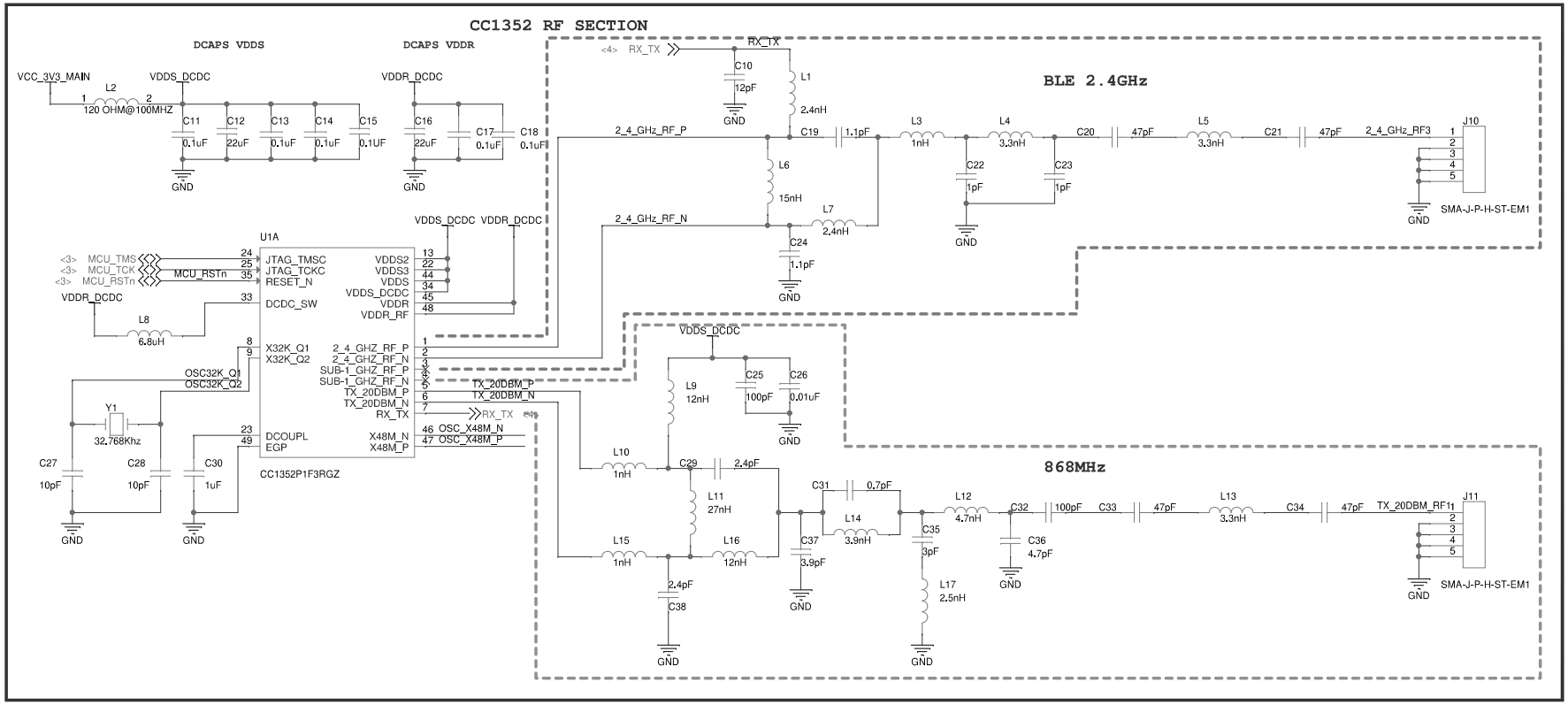

MICROVISIONEMBEDDED PVT LTD

Title	04 CC1352P RF INTERFACE		
Size B	Document Number <Doc>		Rev <RevCode>
Date: Tuesday, April 28, 2026	Sheet 4 of 6		