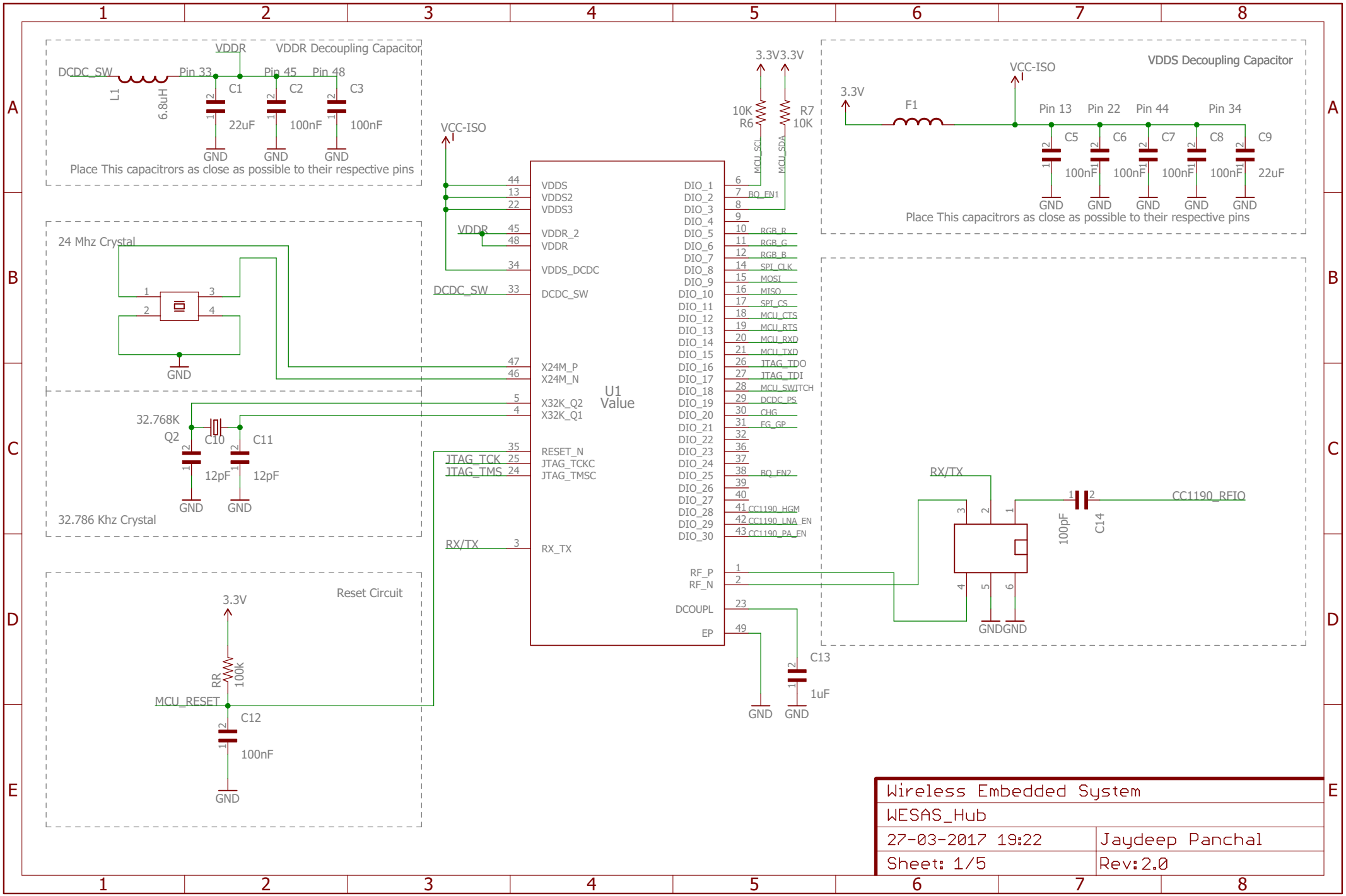

27-03-2017 21:11 C:\Users\Jaydeep\Documents\eagle\WESAS_2.0\WESAS_2.0\WESAS_Hub.sch (Sheet: 1/5)

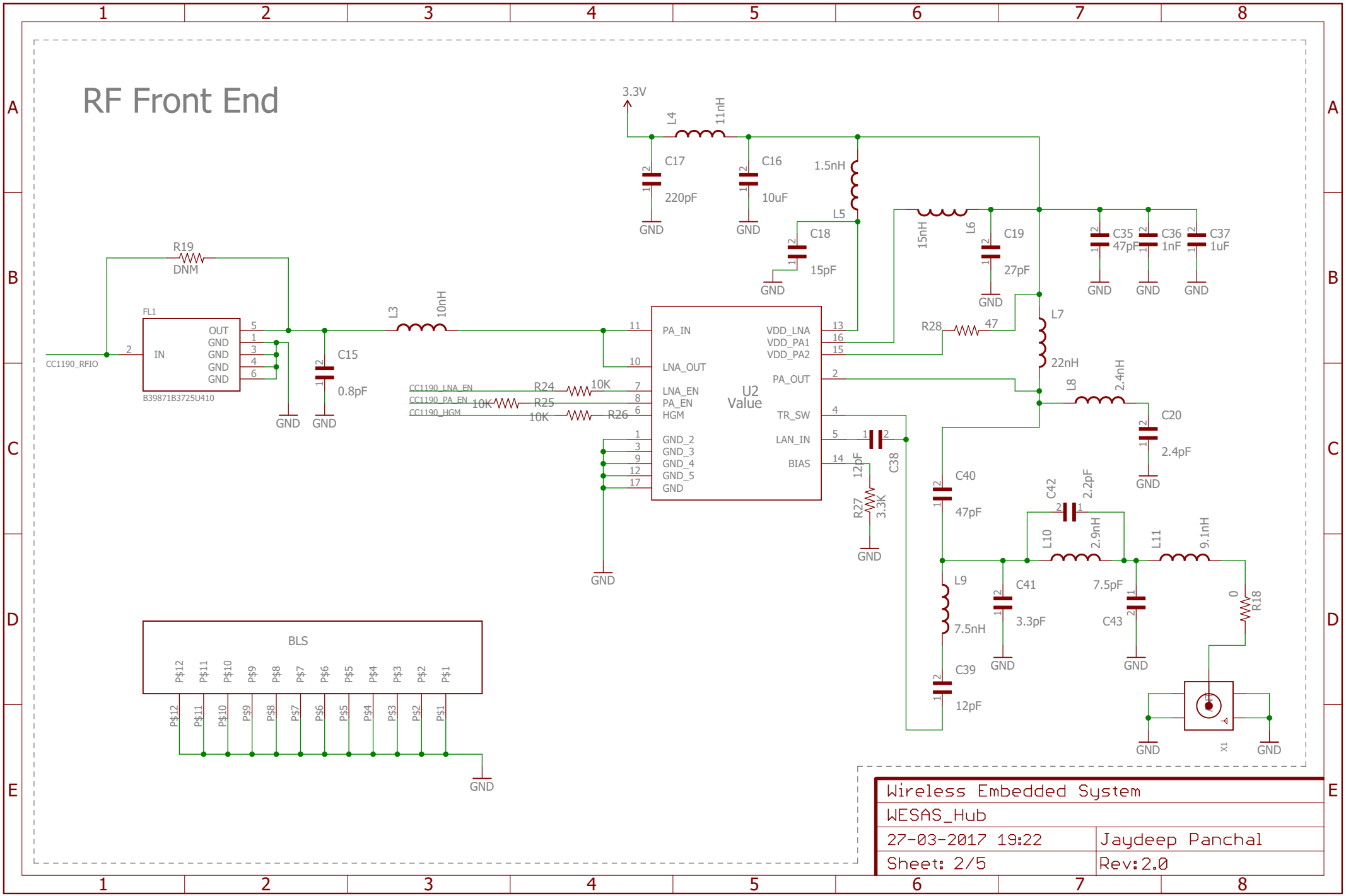

27-03-2017 21:11 C:\Users\Jaydeep\Documents\eagle\WESAS_2.0\WESAS_2.0\WESAS_Hub.sch (Sheet: 2/5)