CC1200_MODULE
(NO SAW AND NO SPDT)

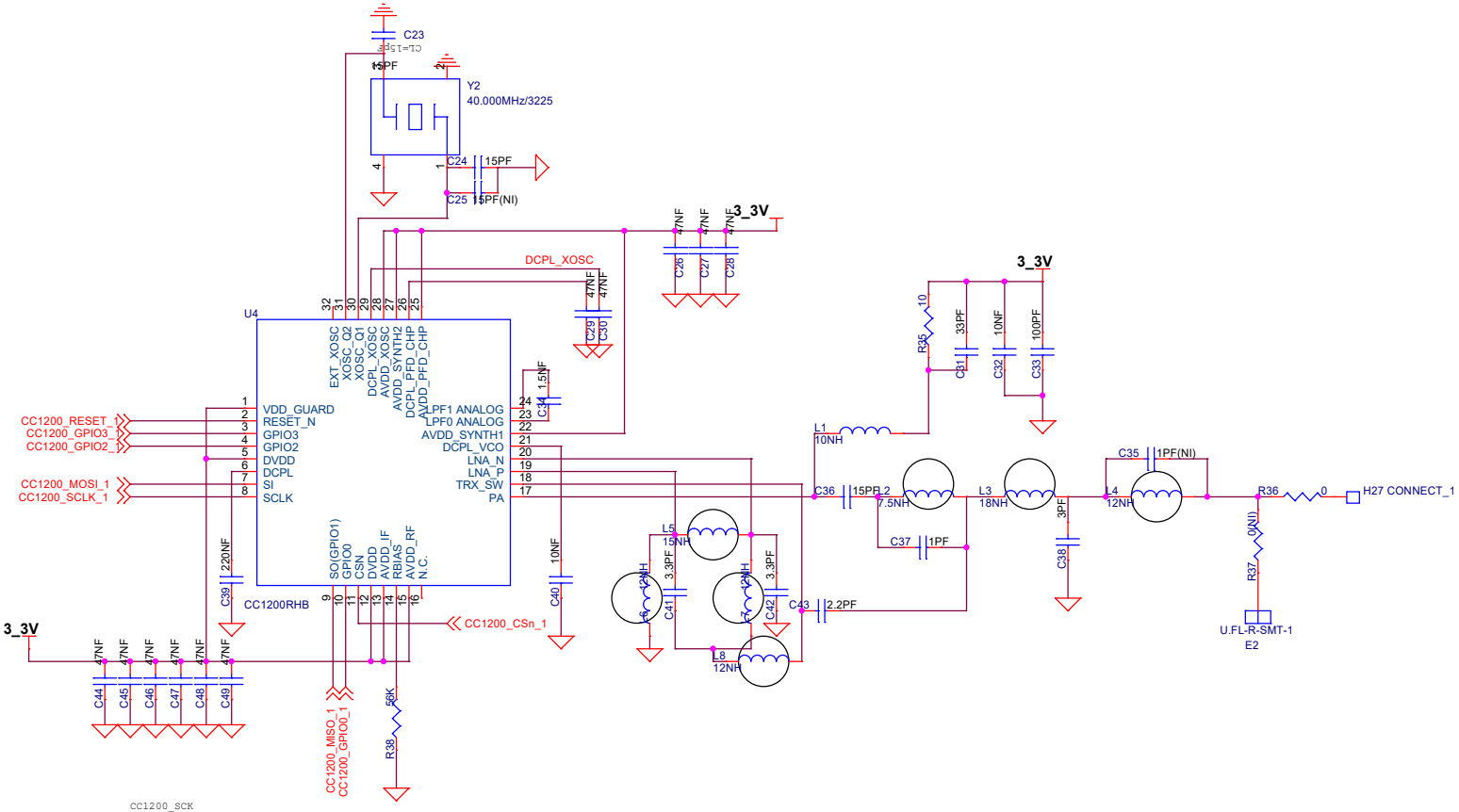

module outline : 25.95 x 19.41

[Check]
1. ESD : ULCE0505A015FR - innochips Size : 1005

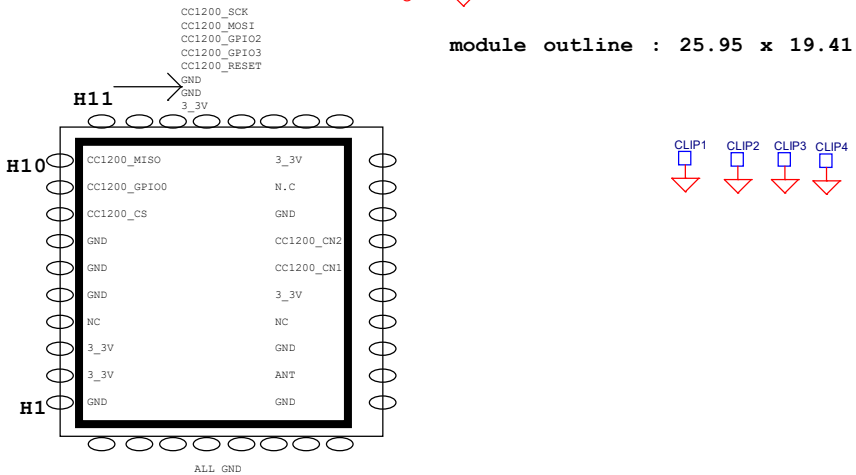

shield can : 23.95 x 17.4 x 1.4
(PES1239, pocons.co.kr, commercial device)
shield can clip : PTC0704 (6.5 x 1.1 x 1.28)

Title	WiSUN_Amigo_NJ	
Size A3	Document Number 3. CC1200_2	Rev 1.0
Date: Friday, October 08, 2021	Sheet 3 of 5	

CC1200_MODULE TEST JIG - with SMARTRF BOARD
(NO SAW AND NO SPDT)

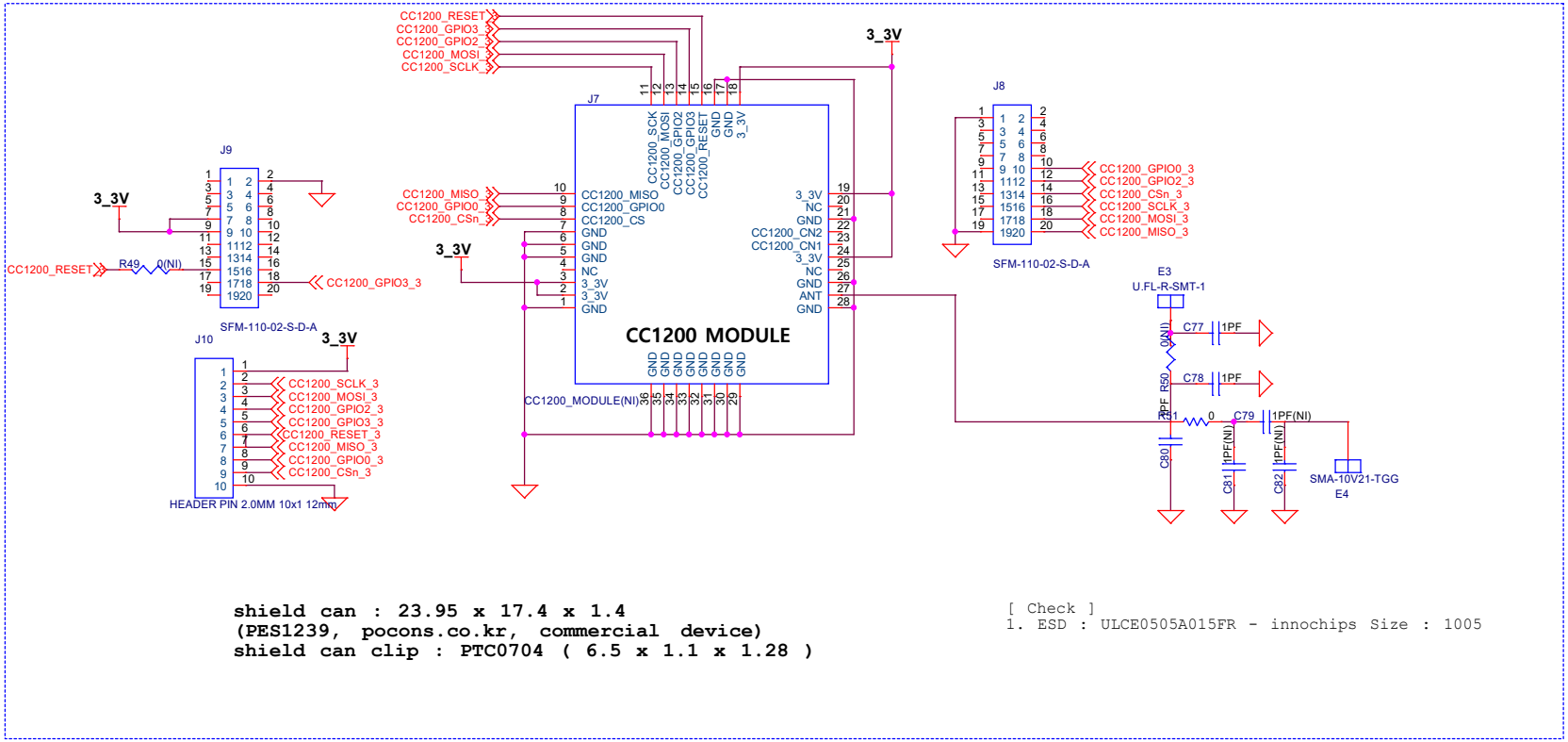

shield can : 23.95 x 17.4 x 1.4
(PES1239, pocons.co.kr, commercial device)
shield can clip : PTC0704 (6.5 x 1.1 x 1.28)

[Check]
1. ESD : ULCE0505A015FR - innochips Size : 1005

Title	WiSUN_Amigo_NJ	
Size A3	Document Number 5. CC1200_TEST Jig	Rev 1.0
Date: Thursday, October 07, 2021	Sheet 5 of 5	