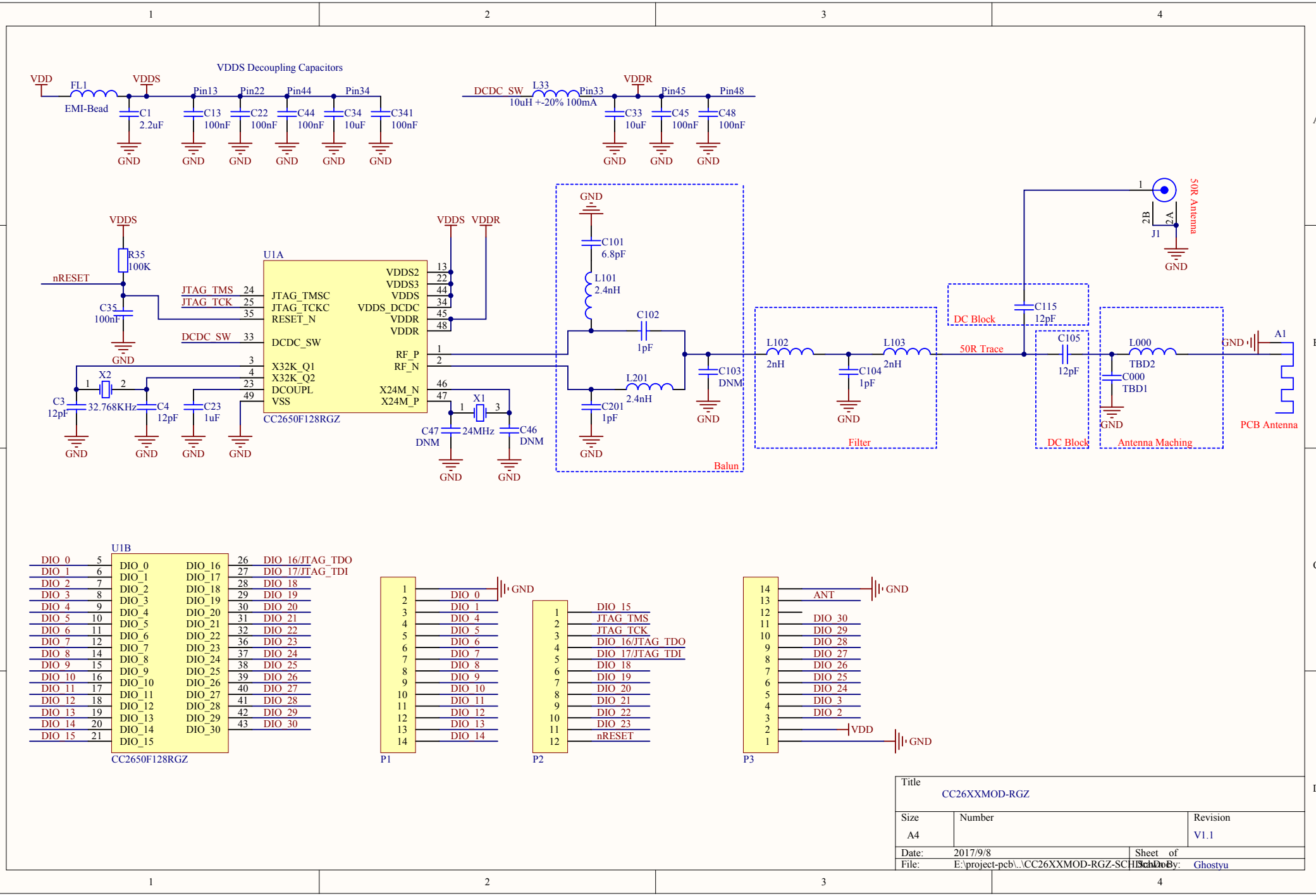
VDDS Decoupling Capacitors
VDD
FL1
EMI-Bead
VDDS
Pin13
Pin22
Pin44
Pin34
C1
2.2uF
C13
100nF
C22
100nF
C44
100nF
C34
10uF
C341
100nF
GND
DCDC_SW
L33
10uH +-20% 100mA
Pin33
VDDR
Pin45
Pin48
C33
10uF
C45
100nF
C48
100nF
R35
100K
nRESET
C35
100nF
JTAG_TMS
JTAG_TCK
DCDC_SW
U1A
JTAG_TMSC
JTAG_TCKC
RESET_N
DCDC_SW
X32K_Q1
X32K_Q2
DCOUPL
VSS
VDDS2
VDDS3
VDDS
VDDS_DCDC
VDDR
VDDR
RF_P
RF_N
X24M_N
X24M_P
CC2650F128RGZ
X2
32.768KHz
C3
12pF
C4
12pF
C23
1uF
X1
24MHz
C47
DNM
C46
DNM
C101
6.8pF
L101
2.4nH
C102
1pF
L201
2.4nH
C201
1pF
C103
DNM
Balun
L102
2nH
C104
1pF
L103
2nH
Filter
DC Block
C115
12pF
50R Trace
C105
12pF
DC Block
L000
TBD2
C000
TBD1
Antenna Maching
J1
50R Antenna
A1
PCB Antenna
U1B
CC2650F128RGZ
DIO_0
DIO_1
DIO_2
DIO_3
DIO_4
DIO_5
DIO_6
DIO_7
DIO_8
DIO_9
DIO_10
DIO_11
DIO_12
DIO_13
DIO_14
DIO_15
DIO_16/JTAG_TDO
DIO_17/JTAG_TDI
DIO_18
DIO_19
DIO_20
DIO_21
DIO_22
DIO_23
DIO_24
DIO_25
DIO_26
DIO_27
DIO_28
DIO_29
DIO_30
P1
P2
P3
ANT
VDD
nRESET
Title
CC26XXMOD-RGZ
Size
A4
Number
Revision
V1.1
Date: 2017/9/8
Sheet of
File: E:\project-pcb\..\CC26XXMOD-RGZ-SCH.DOC
Drawn By: Ghostyu