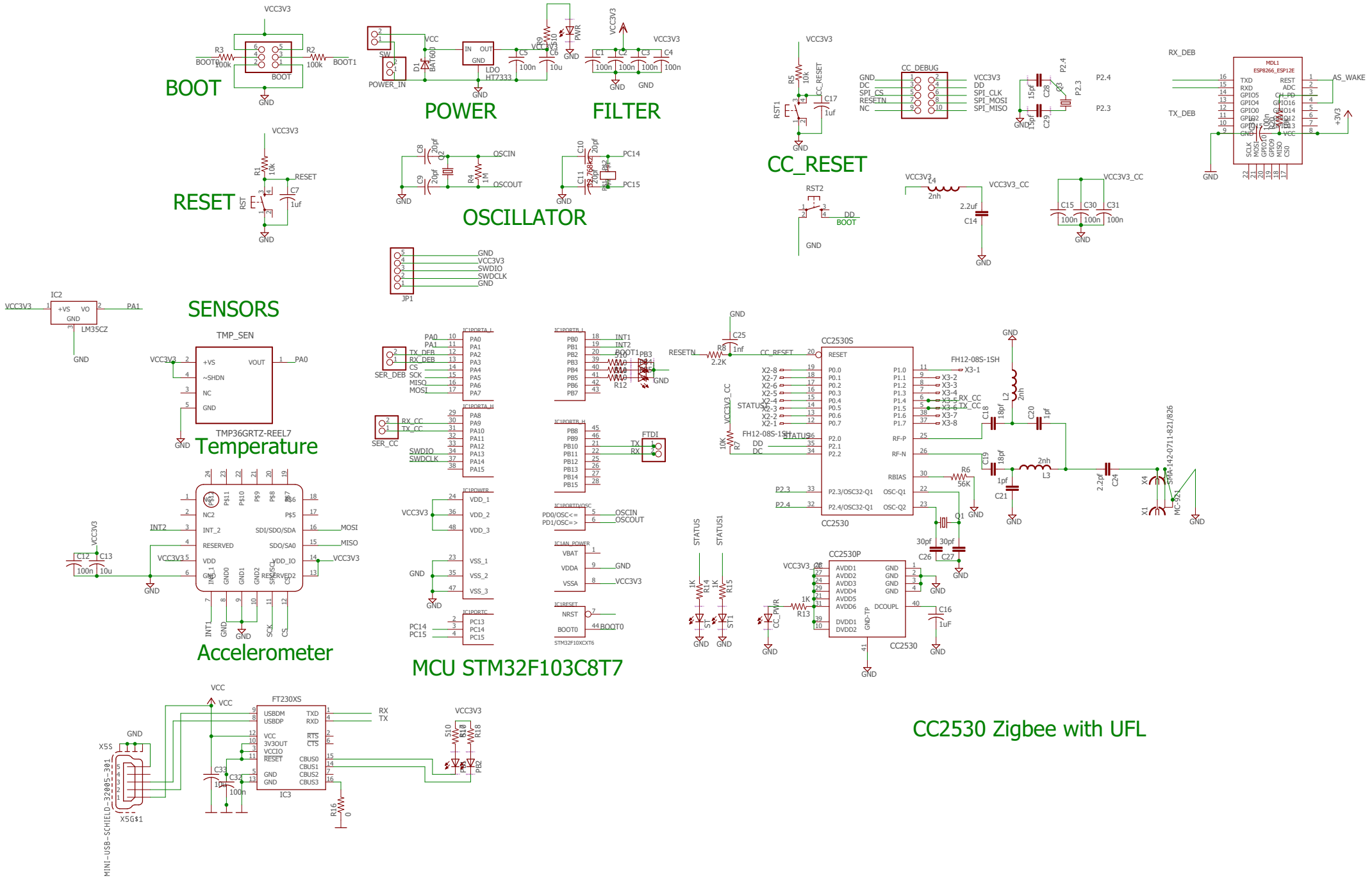
BOOT
POWER
FILTER
RESET
OSCILLATOR
CC_RESET
SENSORS
Temperature
Accelerometer
MCU STM32F103C8T7
CC2530 Zigbee with UFL